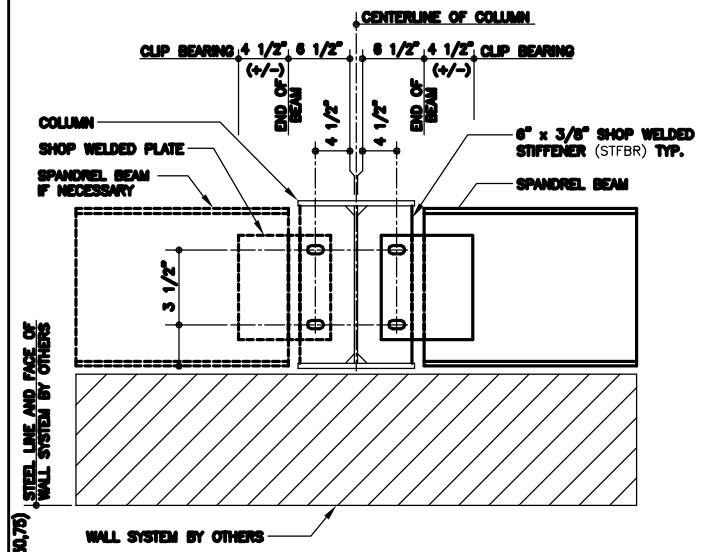

CC0030-(30,70)

SPANDREL BEAM CONNECTION 1 / D8

AT FRAME COLUMN
USE (4) " ø x " A325 BOLTS AND NUTS
REFERENCE ERECTOR NOTE FOR TYPICAL WASHER REQUIREMENTS

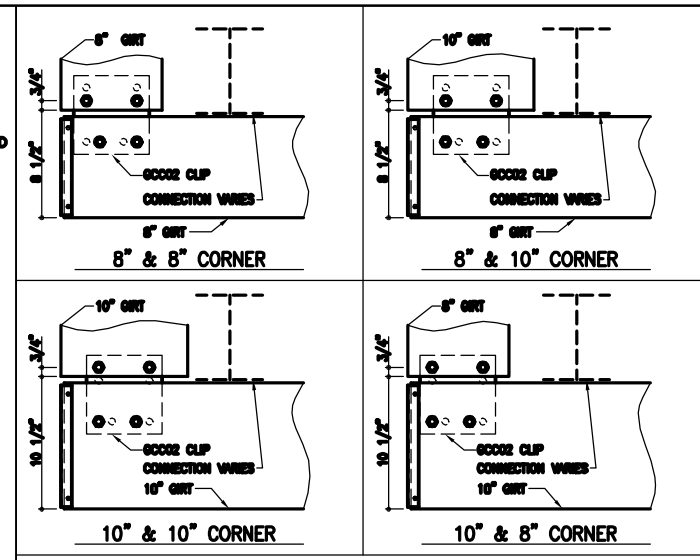

CF0001

BYPASS GIRT BOLT PLACEMENT DETAIL

REFERENCE WASHER DETAIL FOR TYPICAL WASHER REQUIREMENTS
GIRT CLIPS ARE FACTORY PUNCHED TO BE USED WITH MULTIPLE GIRT DEPTHS.
REFER TO THE DETAILS ABOVE TO DETERMINE WHICH HOLES ARE UTILIZED.

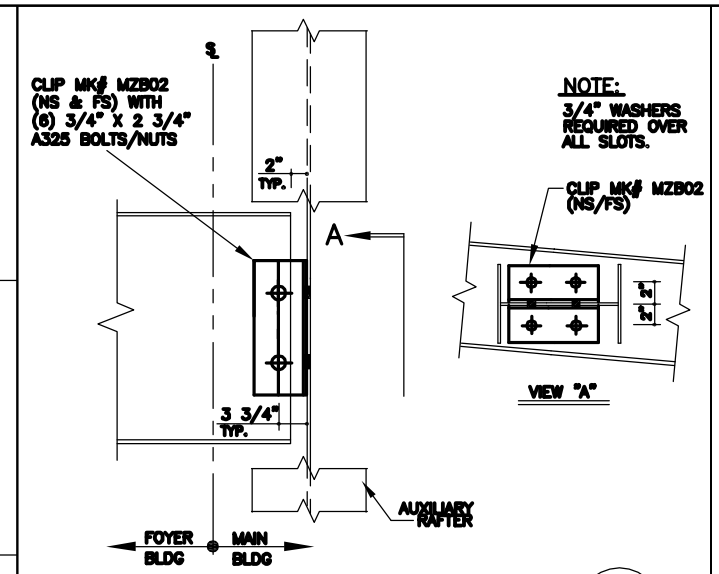

BEAM CONNECTION DETAIL 3 / D8

SPANDREL BEAM TO WEB OF AUXILIARY RAFTER, FLANGE NOT SHOWN FOR CLARITY
REFERENCE ERECTOR NOTE FOR TYPICAL WASHER REQUIREMENTS

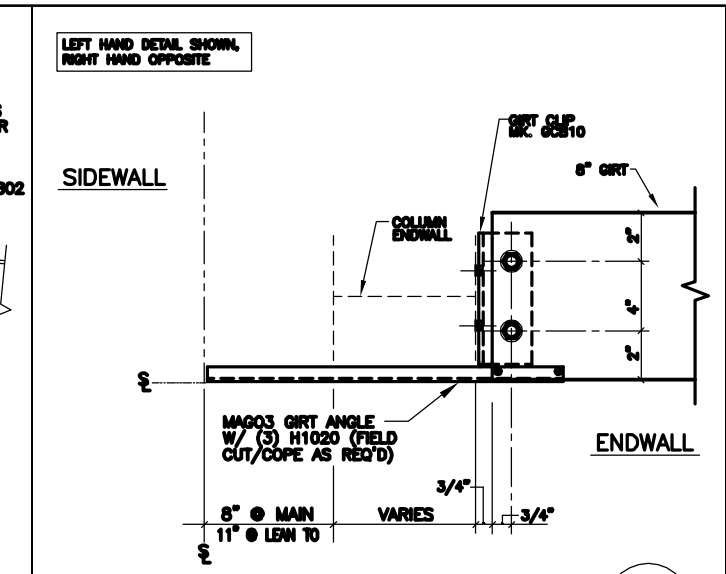

CORNER WALL GIRT DETAIL 4 / D8

NOTE: USE (4) 1/2"X 1 1/2" A307 BOLTS H0500/NUTS H0400
REFERENCE ERECTOR NOTE FOR TYPICAL WASHER REQUIREMENTS

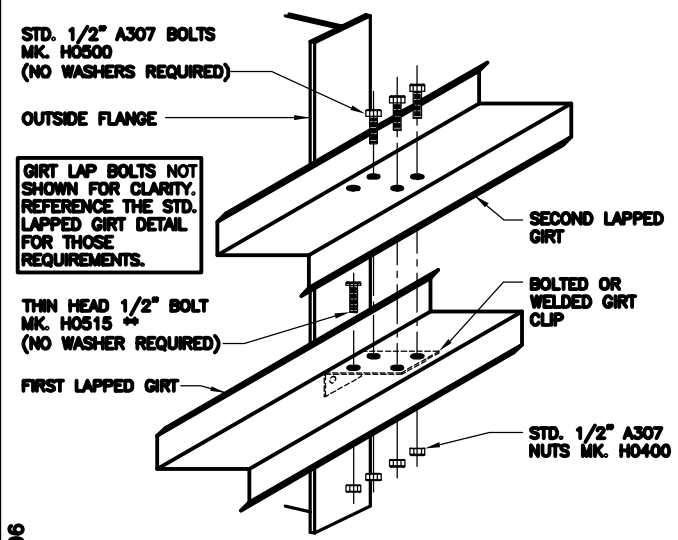

CC0006

LAPPED GIRT DETAIL

LAPPED GIRTS @ INTERIOR BAY COLUMNS
** THE THIN HEAD 1/2" A307 BOLT MUST BE INSTALLED INTO THE FIRST GIRT AND CLIP OF A LAPPED CONDITION. THE BOLT/NUT ASSEMBLY MUST BE WRENCH TIGHT PRIOR TO THE SECOND LAPPED GIRT BEING INSTALLED.

ERECTOR NOTE: GIRT CLIPS ARE FACTORY PUNCHED TO BE USED WITH MULTIPLE GIRT DEPTHS. REFER TO THE STANDARD BOLT PLACEMENT DETAIL(S) FOR PROPER BOLT PLACEMENT.

ERECTOR NOTE: UNLESS SPECIFICALLY NOTED OTHERWISE, STANDARD ZEE GIRT ORIENTATION IS TO HAVE THE GIRT TOED DOWN AT THE STEEL LINE AS SHOWN IN THE DETAIL BELOW.

UNLESS SPECIFICALLY NOTED OTHERWISE, STANDARD CEE GIRT ORIENTATION IS TO HAVE THE GIRT TOED UP AS SHOWN IN THE DETAIL BELOW. STANDARD CLIP ATTACHMENT IS BELOW THE GIRT, HOWEVER SOME DETAILS REQUIRE THAT THE CLIP BE ABOVE THE GIRT OR THAT THE GIRT BE TOED DOWN.

(REFER TO THE GIRT DETAILS FOR SPECIFIC CONNECTION REQUIREMENTS).

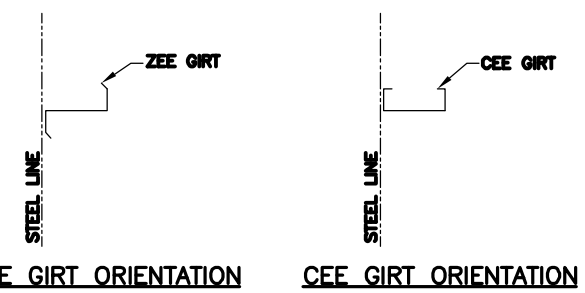

CC0005

STANDARD GIRT ORIENTATION DETAIL

SEE GIRT DETAILS FOR GIRT CONNECTIONS
(COLUMNS NOT SHOWN)

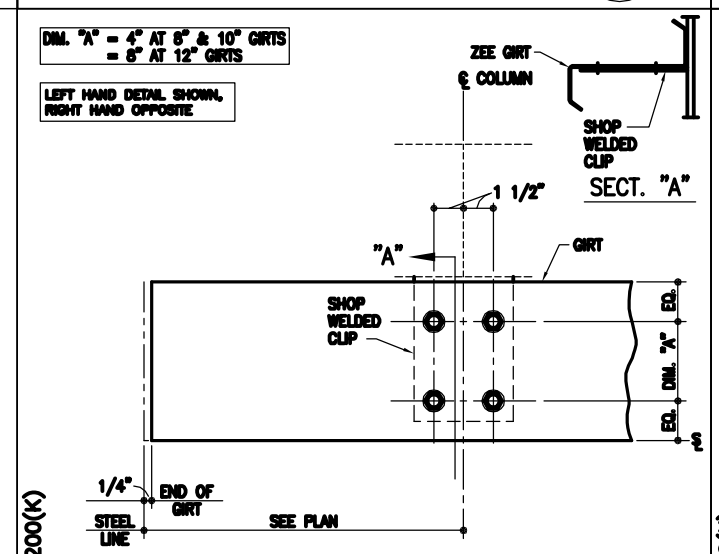

CF1200(K)

GIRT TERMINATION DETAIL 7 / D8

LEFT HAND DETAIL SHOWN, RIGHT HAND OPPOSITE
NOTE: USE (4) 1/2" x 1 1/2" A307 BOLTS H0500/NUTS H0400
REFERENCE STANDARD WASHER DETAIL FOR TYPICAL WASHER REQUIREMENTS

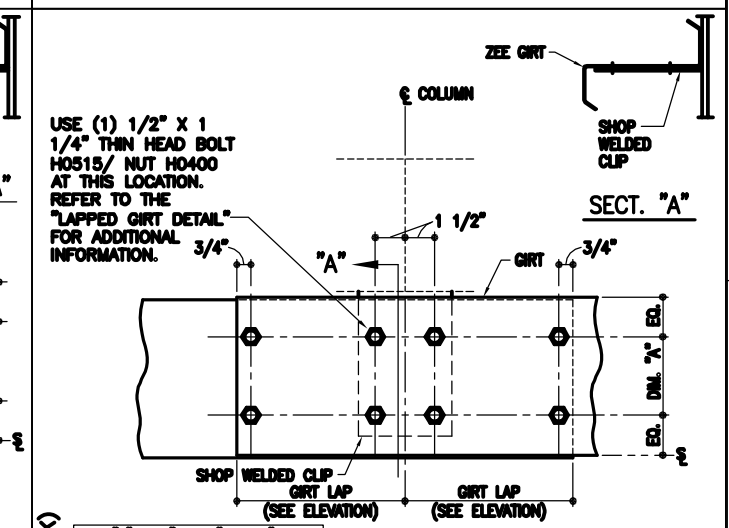

CC1010(K)

SW OR EW GIRT DETAIL 8 / D8

LAPPED BYPASS GIRTS AT INTERIOR BAY COLUMNS
NOTE: USE (7) 1/2"x 1 1/2" A307 BOLTS H0500/NUTS H0400
REFERENCE ERECTOR NOTE FOR TYPICAL WASHER REQUIREMENTS

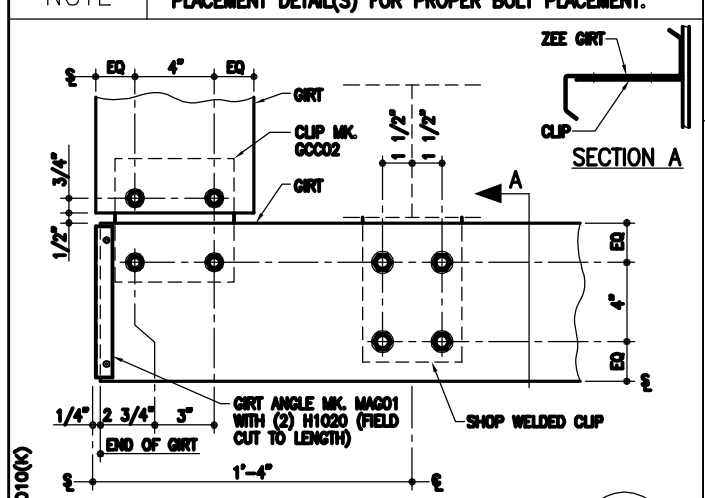

CF1010(K)

BYPASS GIRT CORNER DETAIL 9 / D8

LEFT HAND DETAIL SHOWN, RIGHT HAND OPPOSITE
NOTE: USE (6) 1/2" x 1 1/2" A307 BOLTS H0500/NUTS H0400
REFERENCE STANDARD WASHER DETAIL FOR TYPICAL WASHER REQUIREMENTS

BOLT PLACEMENT DETAILS

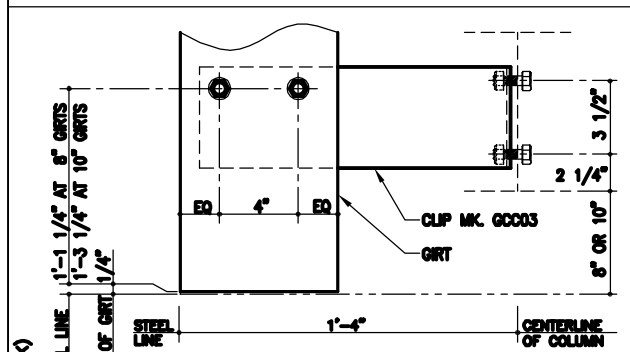

CF0250(K)

GIRT TERMINATION DETAIL 10 / D8

LEFT HAND DETAIL SHOWN, RIGHT HAND OPPOSITE
NOTE: USE (4) 1/2" x 1 1/2" A307 BOLTS H0500/NUTS H0400
REFERENCE STANDARD WASHER DETAIL FOR TYPICAL WASHER REQUIREMENTS

ISSUE	DWN	CHK	ENG	P.E.	DATE
APPROVAL	BW/EV	JR	JZ		11/26/08
REVISED APPROVAL	TJF		JZ		01/29/09
PERMITS FOR APPROVAL	JH		JZ		03/17/09
REVISED APPROVALS	NJS				04/09/09

NUCOR BUILDING SYSTEMS
600 APACHE TRAIL
TERRELL, TX 75160
PHONE: (972) 524-5407
FAX: (972) 524-5417

PROJECT NAME: ASHISH MISHRA
JACKSON, MS
CUSTOMER: METAL BUILDERS SUPPLY
PEARL, MS

JOB NUMBER: T08H0501A

SHEET NO: D8 of 14

THIS SEAL PERTAINS ONLY TO THE MATERIALS DESIGNED AND SUPPLIED BY NUCOR BUILDING SYSTEMS, A DIVISION OF NUCOR CORPORATION. THE DRAWINGS AND THE METAL BUILDING WHICH THEY REPRESENT ARE THE PRODUCT OF NUCOR BUILDING SYSTEMS. THE REGISTERED PROFESSIONAL ENGINEER WHOSE SEAL APPEARS ON THESE DRAWINGS IS EMPLOYED BY NUCOR BUILDING SYSTEMS AND DOES NOT SERVE AS OR REPRESENT THE PROJECT ENGINEER OF RECORD AND SHALL NOT BE CONSTRUED AS SUCH.