VR16 MANUAL SEAMING INSTRUCTIONS

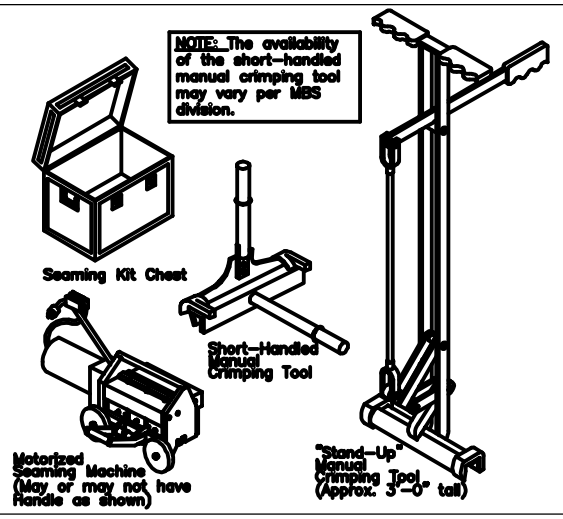

SPECIALIZED SEAMING TOOLS
The seaming of the roof panels requires special seaming tools that are available only through MBS. CAUTION: The use of any other seaming equipment will result in faulty and/or damaged seams and shall invalidate the roof system's material and weathertightness warranties.

SEAMING TOOL SOURCE
The seaming tools are provided by MBS in accordance with the terms and conditions of the MBS contract documents. Contact the MBS Customer Service Department to arrange scheduling, delivery, and return of the seaming tools.

IMPORTANT NOTE: THE INSTRUCTIONS ON THE PAGE ONLY ADDRESS THE USE OF THE HAND CRIMPING TOOL. THE INSTRUCTIONS FOR MECHANICAL SEAMING, IF REQUIRED, ARE OUTLINED IN THE VR16 SEAMING MANUAL, WHICH IS INCLUDED WITH THE MECHANICAL SEAMER KIT.

VERTICAL RIB ROOF PANEL SEAMING REQUIREMENTS

THE DESIGN OF THIS STRUCTURE REQUIRES THAT THE "VISE LOCK"™ SEAMING METHOD BE UTILIZED. ADDITIONAL MOTORIZED SEAMING MAY BE REQUIRED PER: DESIGN, BUYER, END OWNER OR ARCHITECT. SEE BELOW FOR ADDITIONAL SEAMING REQUIREMENTS:

"VISE LOCK"™ SEAM
The "Vise Lock" seam is required on ALL VR16 roofs. To start the motorized seaming machine onto the roof panel, the panel must be hand crimped with the Manual Crimping Tool at the starting eave or ridge end of the panel, and at the end laps. Then seam the full length of the roof panels with the Motorized Seaming Machine. Refer to the VR16 SEAMING MANUAL for specific instructions. This manual is included in the Mechanical Seamer Kit.

WHEN TO SEAM
Whenever possible, the installed roof panels should be seamed at the completion of each day's work. If high winds or rain/snow conditions are imminenet, the installed roof panels must be seamed before such conditions occur.

TEMPORARY SEAMING
Motor seaming machinces may not always be available during the entire roof installation period. In such case, it may be desirable to temporarily seam the roof panels at the roof panel ends and at the clip locations with the manual seaming tool, then later complete the seaming with the motor seaming machine.

ERECTOR NOTE:
The hand seamed roof profile is only a short term temporary solution. The roof seam profile is complete only after the entire roof has been mechanically seamed.

"VISE LOCK"™ SEAM

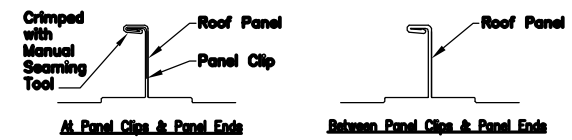

CHECKING THE PANEL ASSEMBLY

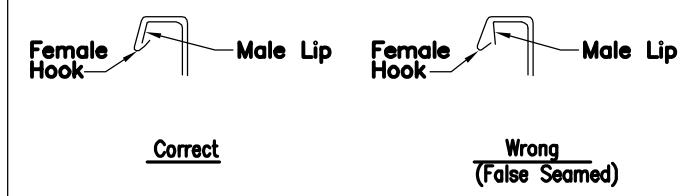

CHECKING THE PANEL ASSEMBLY:

SIDE LAP FIT-UP
Before seaming, inspect the full length of each roof panel side lap. Check that the lip at the panel's male edge is enclosed by the hook of the adjacent panel's female edge, as shown in the detail above. Any conditions where the male lip is not positioned inside of the female hook must be corrected before attempting to seam the roof panels.
CAUTION: False seaming may occur where the female lip does not hook the roof panel's male edge. False seamed roof panels cannot provide their designed wind load and weather resistance.

CLIP ALIGNMENT
Before seaming, check that each roof panel clip is properly seated in the roof side lap assembly. Any displaced clips must be corrected before attempting to seam the roof panels.
CAUTION: Panel clips that are not properly aligned can cause faulty seaming and objectionable seam appearance.

SEAM DAMAGE
Before seaming, check that the male and female edges do not have kinks or other distortions. Any such distortions must be corrected before attempting to seam the roof panels.

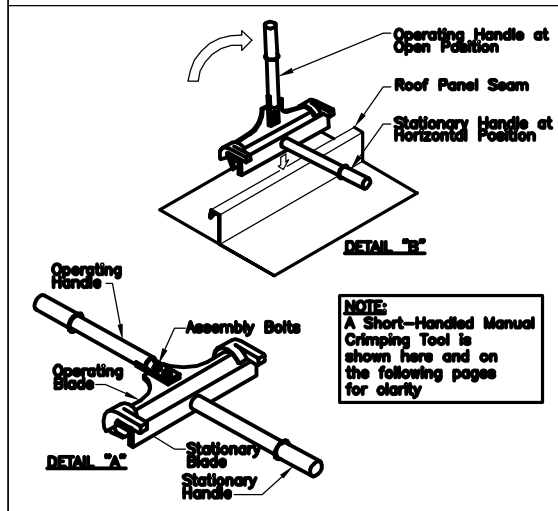

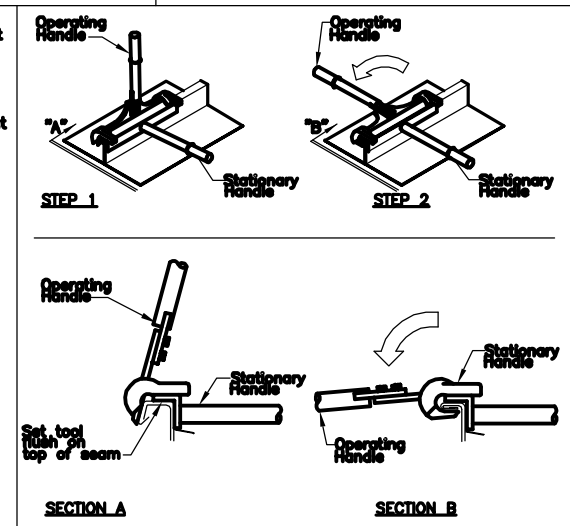

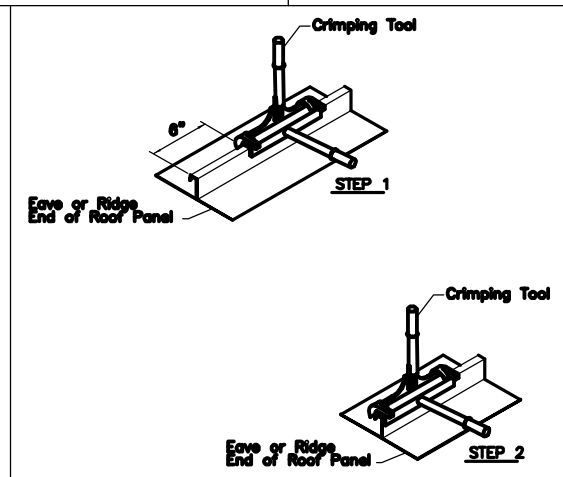

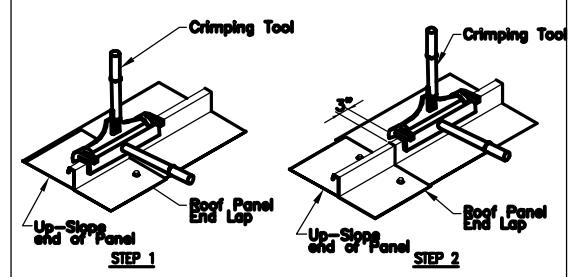

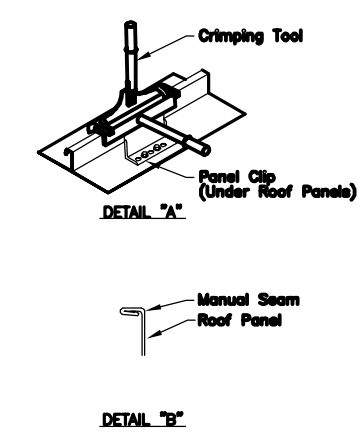

MANUAL CRIMPING TOOL OPERATION

NOMENCLATURE
Detail "A" above identifies the operational parts of the Manual Crimping Tool.

TOOL ORIENTATION TO SEAM
Orient the tool to fit correctly onto the roof panel seam as shown in Detail "B" above. NOTE: the detail shows a short handled crimping tool, however the tool you receive may be the long handled type, however the orientation of either tool on the seam is the same.

EX2010

MANUAL CRIMPING TOOL OPERATION

FORMING THE SEAM
When the tool is correctly positioned on the panel, push the stationary blade solidly against the top of the seam. While holding the stationary handle in the horizontal position, rotate the operating handle down to the horizontal position. This will form the seam.

MANUAL CRIMPING AT EAVE AND RIDGE

TOOL POSITION AT THE END OF THE ROOF PANEL
When seaming at the eave or ridge end of the roof panel, the seaming must be done in two steps.

STEP 1
Position the end of the crimping tool 6" from the end of the roof panel and seam that area.

STEP 2
Position the end of the crimping tool flush with the end of the roof panel and seam that area.

MANUAL CRIMPING AT END LAP AREA

TOOL POSITION AT AN END LAP
When seaming at an end lap, the seaming must be done in two steps.

STEP 1
Center the end of the crimping tool over the end lap and seam that area.

STEP 2
Position the end of the crimping tool 3" from the edge of the end lap and seam that area to ensure that the panel clip at this location is also crimped.

MANUAL CRIMPING AT CLIPS

*BEFORE MANUALLY CRIMPING AT THE CLIPS READ THE NOTES IN THE SEAMING REQUIREMENTS ABOVE.

TOOL POSITION AT PANEL CLIPS
When seaming at a panel clip location, center the tool over the panel clip and seam that area, as shown in Detail "A" above.

CHECKING THE FINISHED SEAM
Rotate the operating handle to the open position, remove the tool and check that the seam is correctly formed, as shown in Detail "B" below.

ISSUE	DWN	CHK	ENG	P.E.	DATE
APPROVAL	BW/EV	JR	JZ		11/26/08
REVISED APPROVAL	TJF		JZ		01/29/09
PERMITS FOR APPROVAL	JH		JZ		03/17/09
REVISED APPROVALS	NJS				04/09/09

NUCOR BUILDING SYSTEMS
600 APACHE TRAIL
TERRELL, TX 75160
PHONE: (972) 524-5407
FAX: (972) 524-5417

PROJECT NAME: ASHISH MISHRA
JACKSON, MS
CUSTOMER: METAL BUILDERS SUPPLY
PEARL, MS

JOB NUMBER: T08H0501A

SHEET NO: D9 of 14

THIS SEAL PERTAINS ONLY TO THE MATERIALS DESIGNED AND SUPPLIED BY NUCOR BUILDING SYSTEMS, A DIVISION OF NUCOR CORPORATION. THE DRAWINGS AND THE METAL BUILDING WHICH THEY REPRESENT ARE THE PRODUCT OF NUCOR BUILDING SYSTEMS. THE REGISTERED PROFESSIONAL ENGINEER WHOSE SEAL APPEARS ON THESE DRAWINGS IS EMPLOYED BY NUCOR BUILDING SYSTEMS AND DOES NOT SERVE AS OR REPRESENT THE PROJECT ENGINEER OF RECORD AND SHALL NOT BE CONSTRUED AS SUCH.