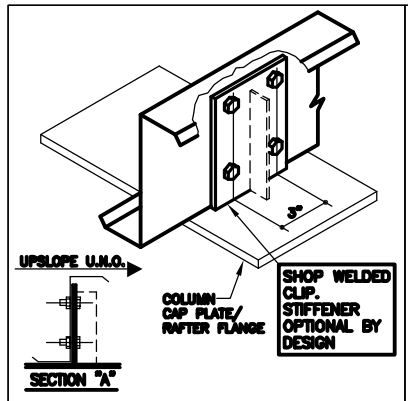

AC
WC
WS

WELDED CLIP @ END FRAME

USE (4) 1/2" x 1 1/2" A307 BOLTS H0003/NUTS H0400 U.N.O.
REFERENCE ERECTOR NOTE FOR TYP. WASHER REQUIREMENTS

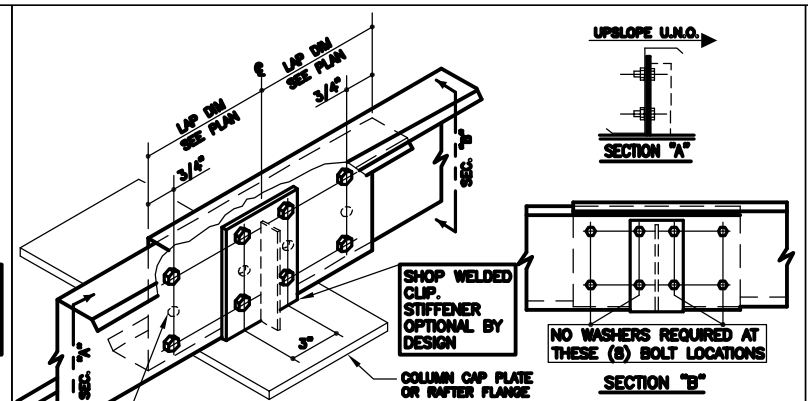

AC–IN
WC–IN
WS–IN

WELDED CLIP @ INTERIOR FRAME

USE (8) 1/2" x 1 1/2" A307 BOLTS H0003/NUTS H0400 U.N.O.

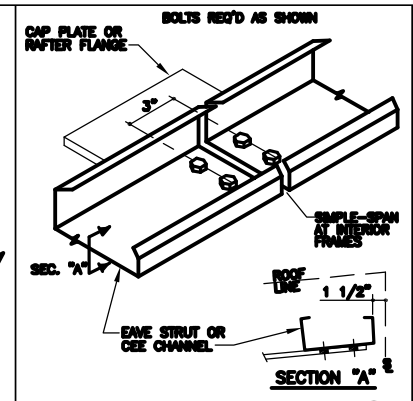

EAVE STRUT / CEE CHANNEL

4 / E4

HIGH EAVE CONNECTION AT INTERIOR FRAMES
USE (4) 1/2" x 2" A325 BOLTS H0003/NUTS H0300
REFERENCE ERECTOR NOTE FOR TYP. WASHER REQUIREMENTS

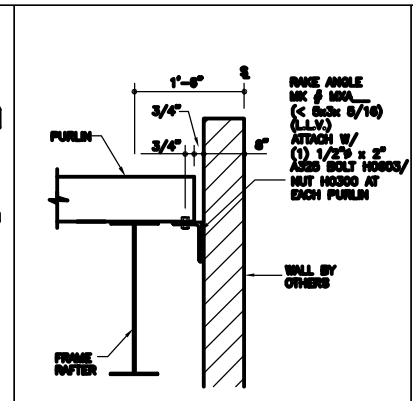

HEAVY RAKE ANGLE

5 / E4

ATTACHING WALL TO ANGLE IS NOT BY NUCOR

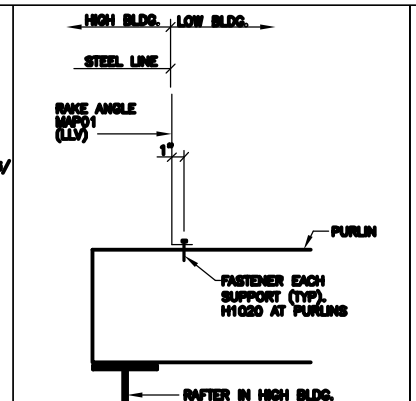

FASTENER PLACEMENT

6 / E4

RAKE PARAPET WITHOUT WALL BELOW, CLASSIC ROOF WITH RAFTER IN HIGH BUILDING

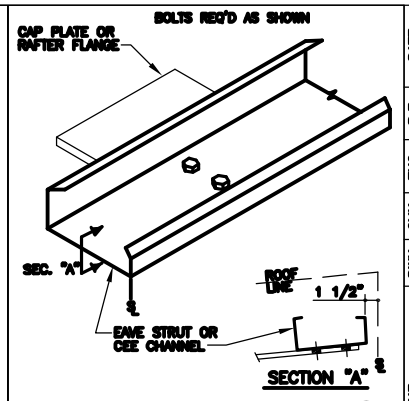

EAVE STRUT / CEE CHANNEL

7 / E4

HIGH EAVE CONNECTION AT R.F. ENDWALL
USE (2) 1/2" x 2" A325 BOLTS H0003/NUTS H0300
REFERENCE ERECTOR NOTE FOR TYP. WASHER REQUIREMENTS

ISSUE	DWN	CHK	ENG	P.E.	DATE
APPROVAL	BW/EV	JR	JZ		11/26/08
REVISED APPROVALS	TJF		JZ		01/29/09
PERMITS FOR APPROVAL	JH		JZ		03/17/09
REVISED APPROVALS	NJS				04/20/09

COLLATERAL DEAD LOADS, UNLESS OTHERWISE NOTED, ARE ASSUMED TO BE UNIFORMLY DISTRIBUTED. WHEN SUSPENDED SPRINKLER SYSTEMS, LIGHTING, HVAC EQUIPMENT, CEILINGS, ETC. ARE SUSPENDED FROM ROOF MEMBERS, CONSULT NUCOR ENGINEERING IF THESE CONCENTRATED LOADS EXCEED 200 POUNDS, OR IF INDIVIDUAL MEMBERS ARE LOADED SIGNIFICANTLY MORE THAN OTHERS.

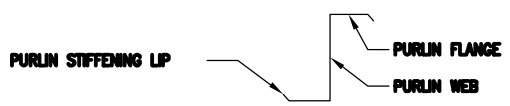

GENERAL RESTRICTION:

UNDER NO CIRCUMSTANCES CAN THE PURLIN STIFFENING LIP BE FIELD MODIFIED FROM THE FACTORY SUPPLIED CONDITION. ALSO DO NOT HANG ANYTHING FROM PURLIN STIFFENING LIP.

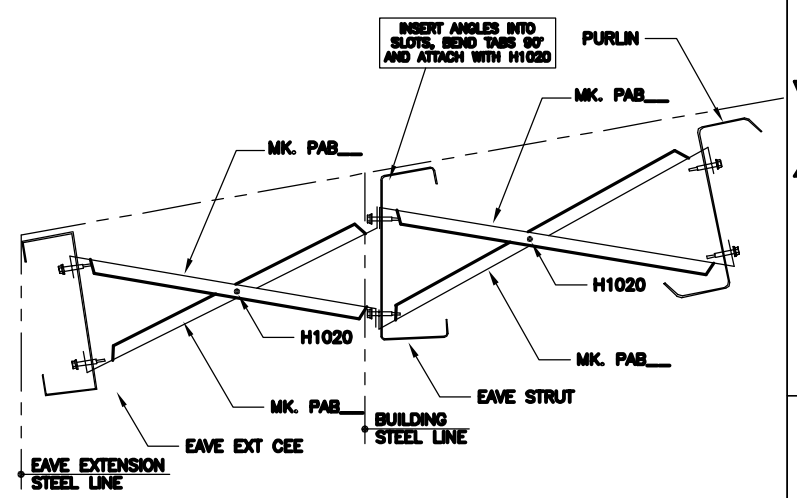

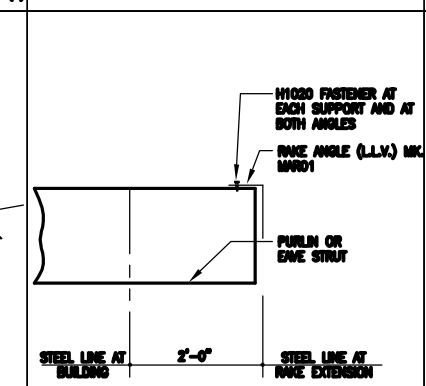

RAKE ANGLE ATTACHMENT

12 / E4

RAKE ANGLE ATTACHMENT AT RAKE EXTENSION

BD0126 MOD.

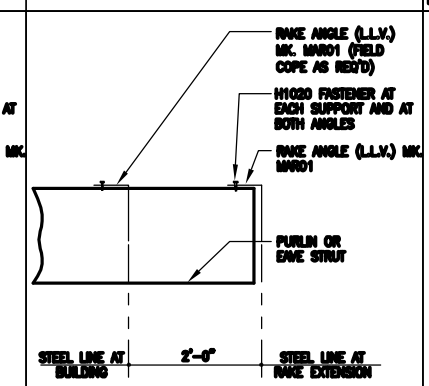

RAKE ANGLE ATTACHMENT

13 / E4

RAKE ANGLE ATTACHMENT AT RAKE EXTENSION

BD0126

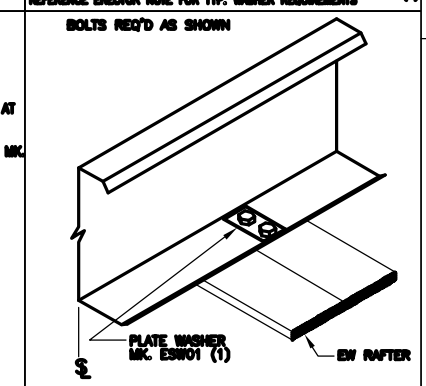

EAVE STRUT

14 / E4

BYPASS SIDEWALL CONDITION
LOW EAVE BUILT-UP EW CONDITION
USE (2) 1/2" X 2" A325 BOLT H0003/NUT H0300 U.N.O.

OPTIONS FOR SUPPORT ATTACHMENTS

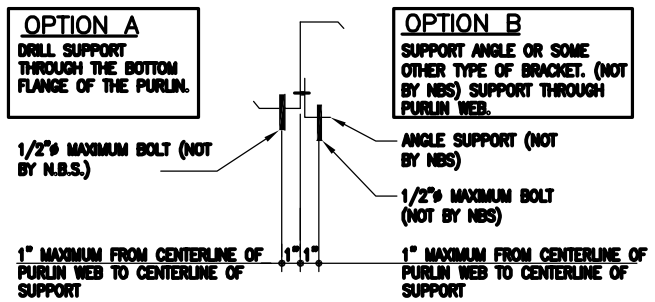

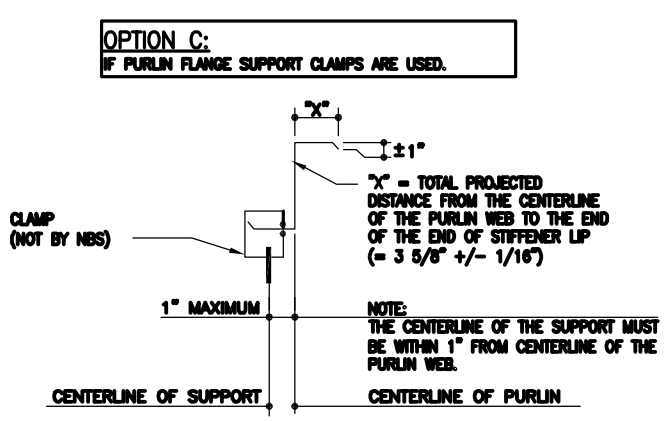

NBS PURLIN SUPPORT METHODS

BD0130

PLAN VIEW OF PURLIN BRACING LOCATIONS PER BAY

1) THERE ARE ALWAYS (2) ROWS OF PURLIN BRACING REQUIRED REGARDLESS OF THE BAY LENGTH.

2) THE PURLIN BRACING IS ALWAYS SPACED AS SHOWN IN THE DETAIL BELOW.

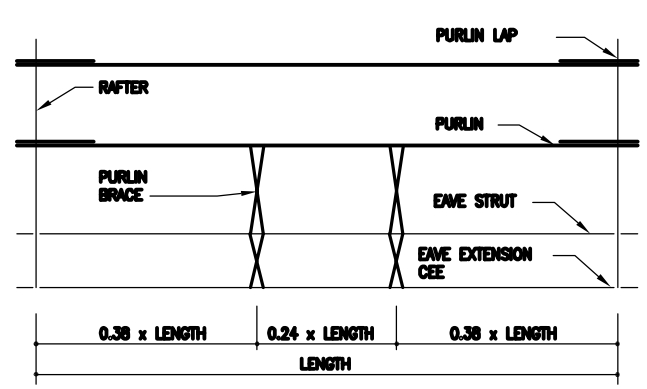

LOW EAVE PURLIN BRACING

(EAVE EXT CEE TO EAVE STRUT, EAVE STRUT TO FIRST PURLIN)

BE0005 MOD.

NUCOR BUILDING SYSTEMS
600 APACHE TRAIL
TERRELL, TX 75160
PHONE: (972) 524-5407
FAX: (972) 524-5417

PROJECT NAME: ASHISH MISHRA
JACKSON, MS
CUSTOMER: METAL BUILDERS SUPPLY
PEARL, MS

JOB NUMBER: T08H0501A

SHEET NO: E4 of 31

THIS SEAL PERTAINS ONLY TO THE MATERIALS DESIGNED AND SUPPLIED BY NUCOR BUILDING SYSTEMS, A DIVISION OF NUCOR CORPORATION. THE DRAWINGS AND THE METAL BUILDING WHICH THEY REPRESENT ARE THE PRODUCT OF NUCOR BUILDING SYSTEMS. THE REGISTERED PROFESSIONAL ENGINEER WHOSE SEAL APPEARS ON THESE DRAWINGS IS EMPLOYED BY NUCOR BUILDING SYSTEMS AND DOES NOT SERVE AS OR REPRESENT THE PROJECT ENGINEER OF RECORD AND SHALL NOT BE CONSTRUED AS SUCH.