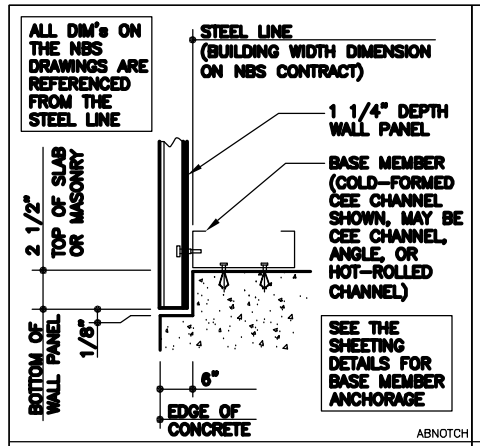

CONCRETE NOTCH DETAIL

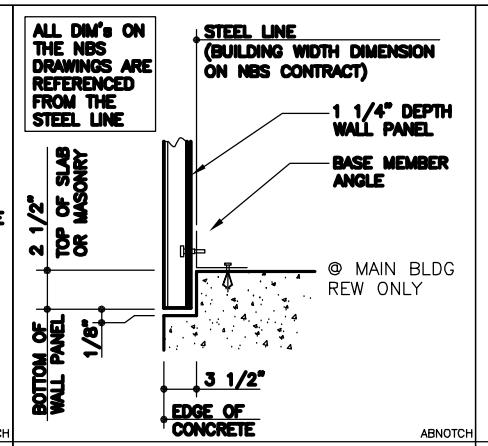

CONCRETE NOTCH DETAIL

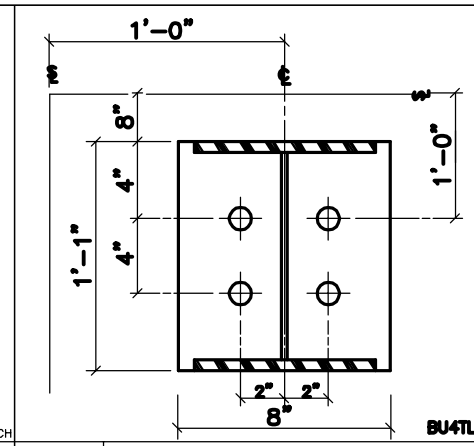

A (4) 3/4" ø ANCHOR BOLTS WITH A 3" PROJECTION

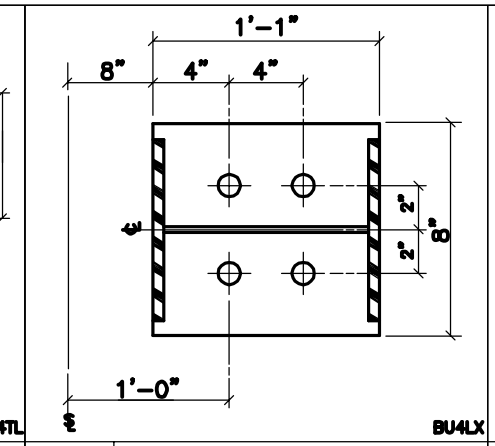

B (4) 3/4" ø ANCHOR BOLTS WITH A 3" PROJECTION

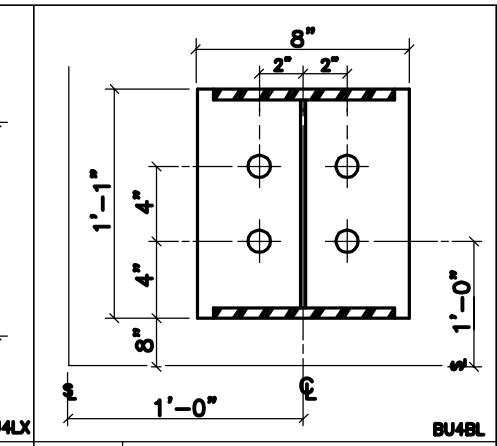

C (4) 3/4" ø ANCHOR BOLTS WITH A 3" PROJECTION

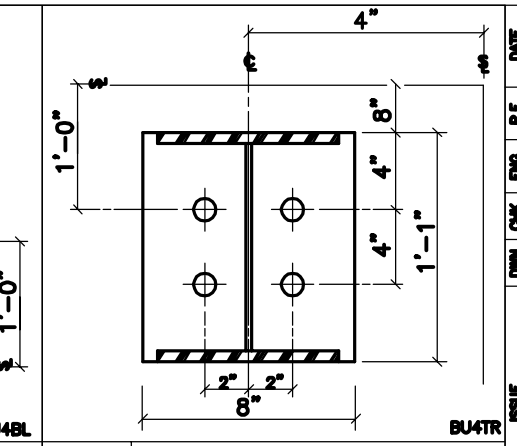

D (4) 3/4" ø ANCHOR BOLTS WITH A 3" PROJECTION

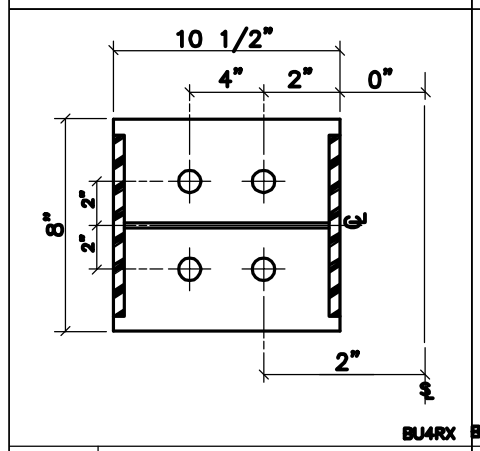

E (4) 3/4" ø ANCHOR BOLTS WITH A 3" PROJECTION

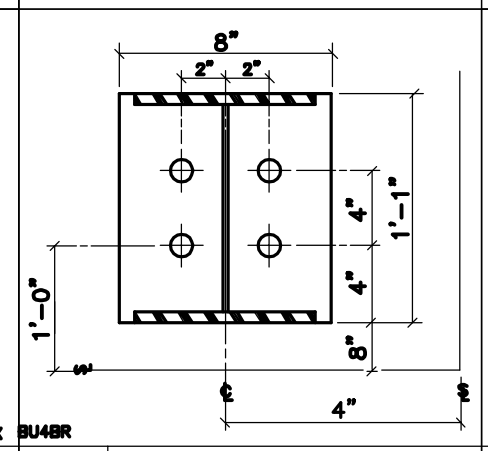

F (4) 3/4" ø ANCHOR BOLTS WITH A 3" PROJECTION

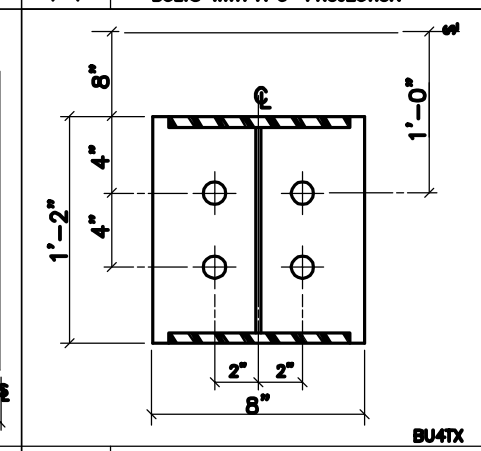

G (4) 3/4" ø ANCHOR BOLTS WITH A 3" PROJECTION

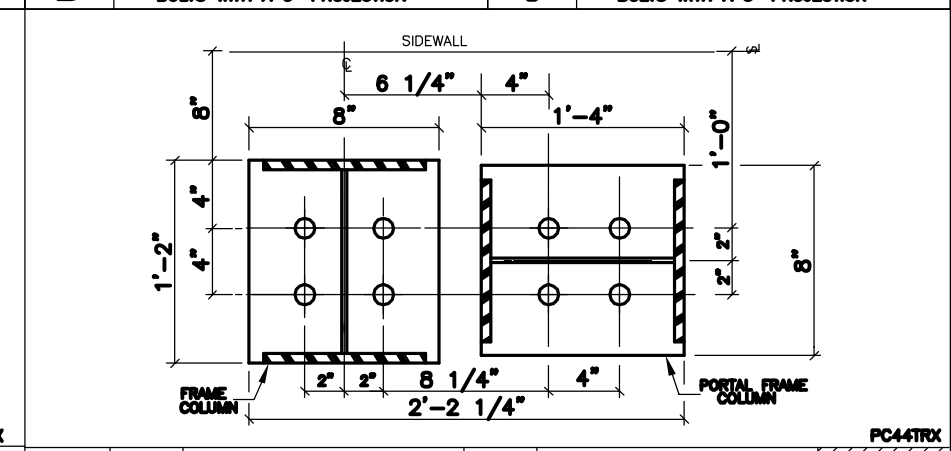

H FRAME COLUMN (4) 3/4" ø ANCHOR BOLTS WITH A 3" PROJECTION PORTAL COLUMN (4) 3/4" ø ANCHOR BOLTS WITH A 3" PROJECTION

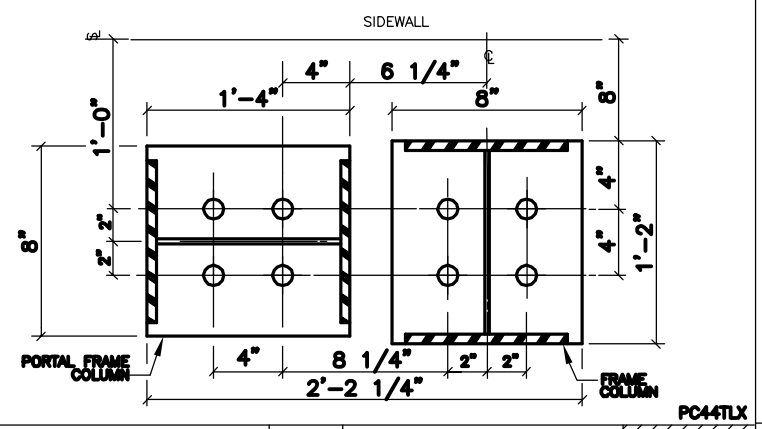

J FRAME COLUMN (4) 3/4" ø ANCHOR BOLTS WITH A 3" PROJECTION PORTAL COLUMN (4) 3/4" ø ANCHOR BOLTS WITH A 3" PROJECTION

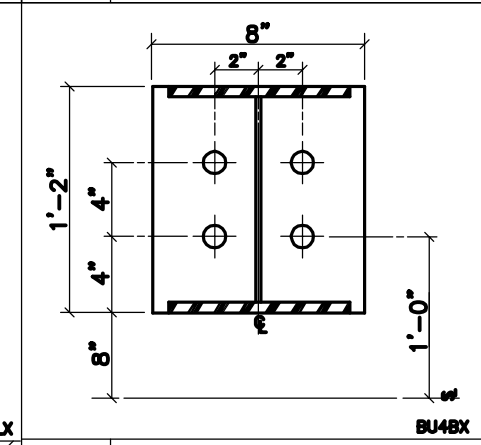

K (4) 3/4" ø ANCHOR BOLTS WITH A 3" PROJECTION

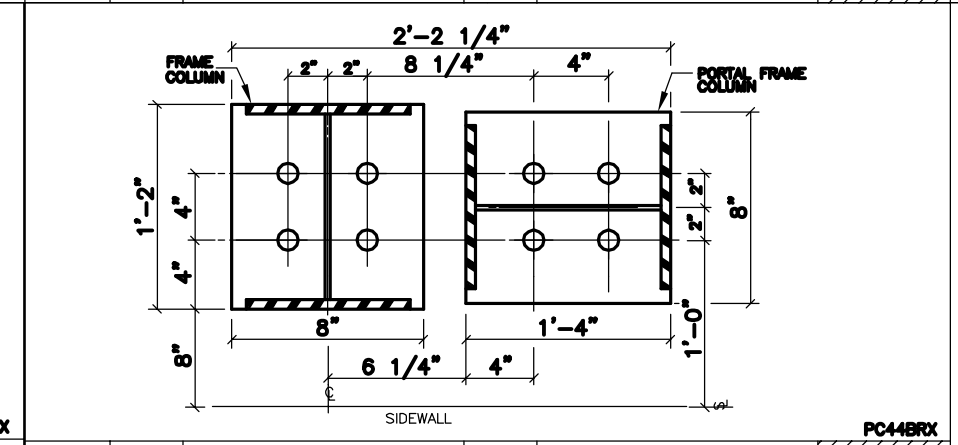

L FRAME COLUMN (4) 3/4" ø ANCHOR BOLTS WITH A 3" PROJECTION PORTAL COLUMN (4) 3/4" ø ANCHOR BOLTS WITH A 3" PROJECTION

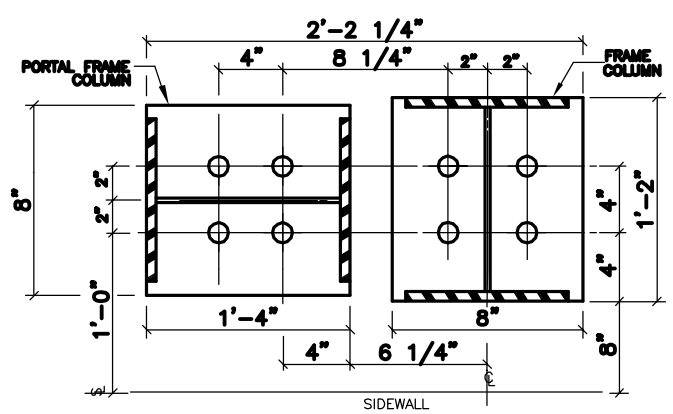

M FRAME COLUMN (4) 3/4" ø ANCHOR BOLTS WITH A 3" PROJECTION PORTAL COLUMN (4) 3/4" ø ANCHOR BOLTS WITH A 3" PROJECTION

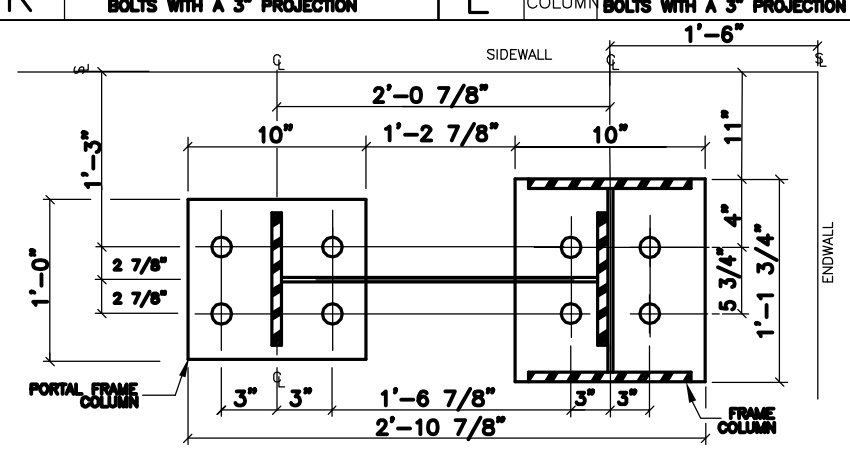

N FRAME COLUMN (4) 1" ø ANCHOR BOLTS WITH A 3" PROJECTION PORTAL COLUMN (4) 1" ø ANCHOR BOLTS WITH A 3" PROJECTION

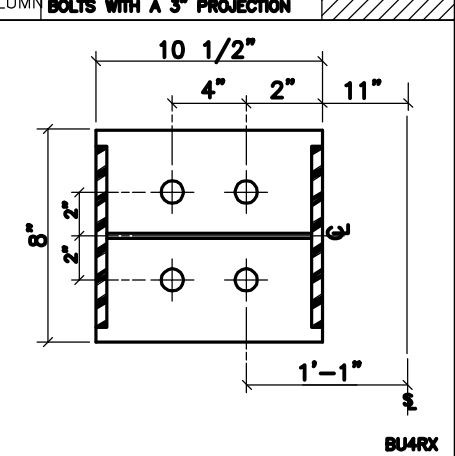

P (4) 3/4" ø ANCHOR BOLTS WITH A 3" PROJECTION

ISSUE	DWN	CHK	ENG	P.E.	DATE
APPROVAL	BW/EV	JR	JZ		11/26/08
REVISED APPROVAL	TJF		JZ		01/29/09
PERMITS FOR APPROVAL	JH		JZ		03/17/09
REVISED APPROVALS	NJS				04/20/09

NUCOR BUILDING SYSTEMS
600 APACHE TRAIL
TERRELL, TX 75160
PHONE: (972) 524-5407
FAX: (972) 524-5417

PROJECT NAME: ASHISH MISHRA
JACKSON, MS

CUSTOMER: METAL BUILDERS SUPPLY
PEARL, MS

JOB NUMBER: T08H0501A

SHEET NO: F2 of 3

THIS SEAL PERTAINS ONLY TO THE MATERIALS DESIGNED AND SUPPLIED BY NUCOR BUILDING SYSTEMS, A DIVISION OF NUCOR CORPORATION. THE DRAWINGS AND THE METAL BUILDING WHICH THEY REPRESENT ARE THE PRODUCT OF NUCOR BUILDING SYSTEMS. THE REGISTERED PROFESSIONAL ENGINEER WHOSE SEAL APPEARS ON THESE DRAWINGS IS EMPLOYED BY NUCOR BUILDING SYSTEMS AND DOES NOT SERVE AS OR REPRESENT THE PROJECT ENGINEER OF RECORD AND SHALL NOT BE CONSTRUED AS SUCH.