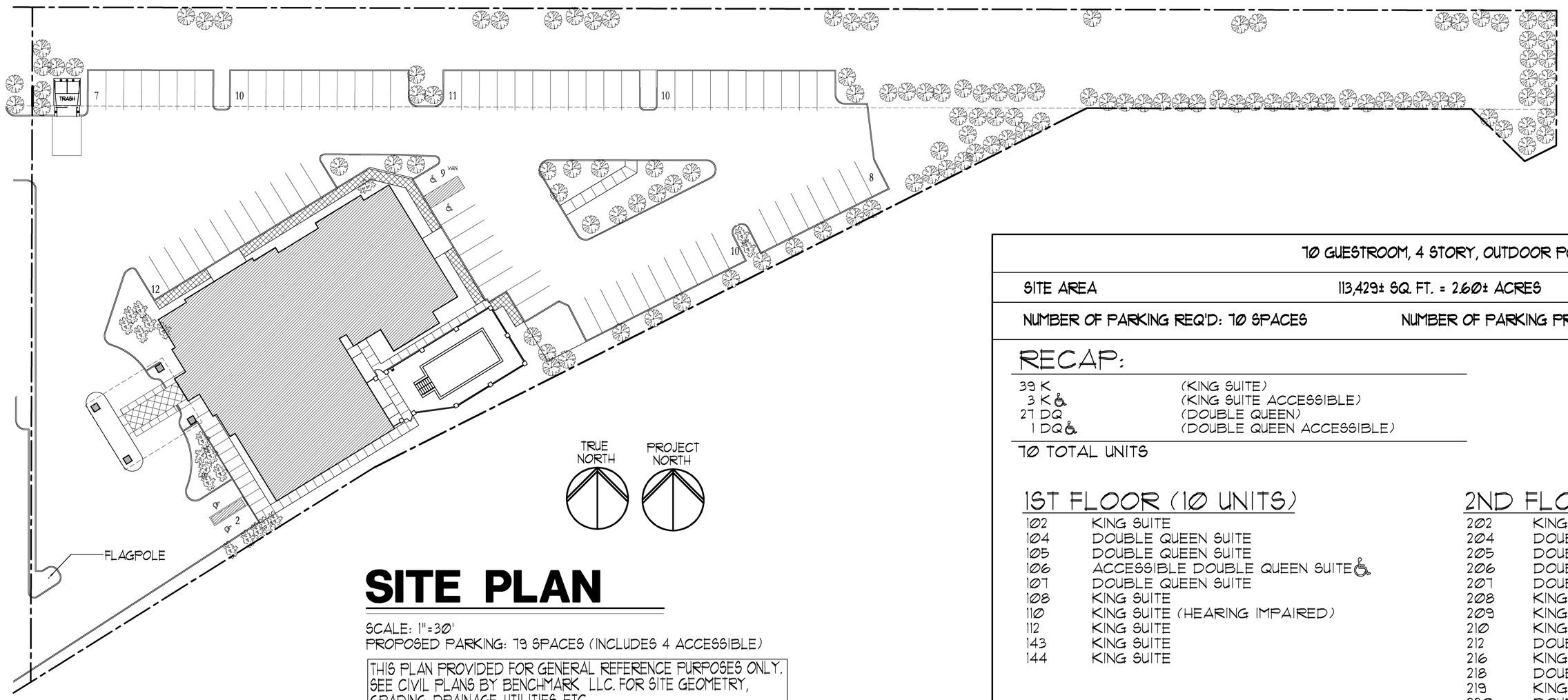

SITE PLAN

SCALE: 1"=30'
PROPOSED PARKING: 79 SPACES (INCLUDES 4 ACCESSIBLE)

THIS PLAN PROVIDED FOR GENERAL REFERENCE PURPOSES ONLY. SEE CIVIL PLANS BY BENCHMARK LLC. FOR SITE GEOMETRY, GRADING, DRAINAGE, UTILITIES, ETC.

GENERAL DATA	
BUILDING USE GROUP	R-1
CAPACITY	70 GUESTROOMS:
CONSTRUCTION CLASSIFICATION	TYPE 2B (FULLY SPRINKLERED)
FIRE SUPRESSION	TYPE 13
GOVERNING CODES	2006 INTERNATIONAL BUILDING CODE & 2006 IMC LIFE SAFETY (2006 EDITION) 2005 NEC

NOTES:

- ALL INTERIOR FINISH CLASS RATINGS TO COMPLY WITH SECTION 16-3.3 OF NFPA 101.
- ALL COMMON AREAS OF BUILDING TO BE ACCESSIBLE
- PROVIDE DETECTABLE WARNINGS ON PEDESTRIAN LOADING ZONES (SEE SITE PLAN FOR LOCATIONS).

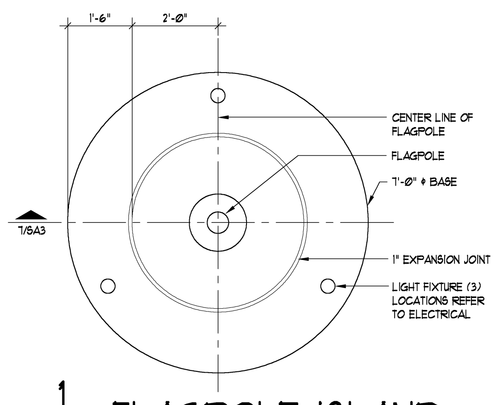

1 FLAGPOLE ISLAND
1/2" = 1'-0"

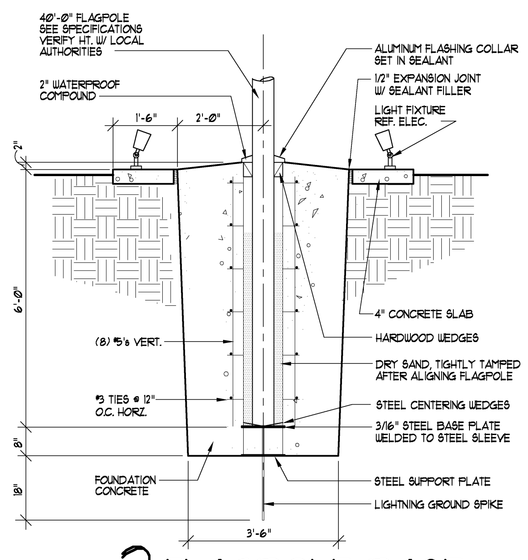

2 FLAGPOLE BASE
1/2" = 1'-0"

70 GUESTROOM, 4 STORY, OUTDOOR POOL

SITE AREA 113,429± SQ. FT. = 2.60± ACRES

NUMBER OF PARKING REQ'D: 70 SPACES NUMBER OF PARKING PROVIDED: 79 (4 ACCESSIBLE SPACES)

RECAP:

39 K	(KING SUITE)
3 K♿	(KING SUITE ACCESSIBLE)
27 DQ	(DOUBLE QUEEN)
1 DQ♿	(DOUBLE QUEEN ACCESSIBLE)

70 TOTAL UNITS

1ST FLOOR (10 UNITS)

102	KING SUITE
104	DOUBLE QUEEN SUITE
105	DOUBLE QUEEN SUITE
106	ACCESSIBLE DOUBLE QUEEN SUITE♿
107	DOUBLE QUEEN SUITE
108	KING SUITE
110	KING SUITE (HEARING IMPAIRED)
112	KING SUITE
143	KING SUITE
144	KING SUITE

2ND FLOOR (20 UNITS)

202	KING SUITE
204	DOUBLE QUEEN SUITE
205	DOUBLE QUEEN SUITE
206	DOUBLE QUEEN SUITE
207	DOUBLE QUEEN SUITE
208	KING SUITE
209	KING SUITE
210	KING SUITE
212	DOUBLE QUEEN SUITE
216	KING SUITE
218	DOUBLE QUEEN SUITE
219	KING SUITE
220	DOUBLE QUEEN SUITE
221	KING SUITE
222	DOUBLE QUEEN SUITE
223	KING SUITE
224	KING SUITE
226	KING SUITE
228	KING SUITE
230	ACCESSIBLE KING SUITE♿

3RD FLOOR (20 UNITS)

302	KING SUITE
304	DOUBLE QUEEN SUITE
305	DOUBLE QUEEN SUITE
306	DOUBLE QUEEN SUITE
307	DOUBLE QUEEN SUITE
308	KING SUITE
309	KING SUITE
310	KING SUITE
312	DOUBLE QUEEN SUITE
316	KING SUITE
318	DOUBLE QUEEN SUITE
319	KING SUITE
320	DOUBLE QUEEN SUITE
321	KING SUITE
322	DOUBLE QUEEN SUITE
223	KING SUITE
324	KING SUITE
326	KING SUITE
328	KING SUITE
330	ACCESSIBLE KING SUITE♿

4TH FLOOR (20 UNITS)

402	KING SUITE
404	DOUBLE QUEEN SUITE
405	DOUBLE QUEEN SUITE
406	DOUBLE QUEEN SUITE
407	DOUBLE QUEEN SUITE
408	KING SUITE
409	KING SUITE
410	KING SUITE
412	DOUBLE QUEEN SUITE
416	KING SUITE
418	DOUBLE QUEEN SUITE
419	KING SUITE
420	DOUBLE QUEEN SUITE
421	KING SUITE
422	DOUBLE QUEEN SUITE
423	KING SUITE
424	KING SUITE
426	KING SUITE
428	KING SUITE
430	ACCESSIBLE KING SUITE♿

AREA SUMMARY	SQ. FT.
LOBBY LEVEL	12,218
LEVEL 2	11,926
LEVEL 3	11,926
LEVEL 4	11,926
TOTAL GROSS BUILDING AREA	47,996
BUILDING AREA PER ROOM	686

RICHARD F. STELDT
ARCHITECT
(262) 502-4500
N85 W16058 APPLETON AVE., MENOMONEE FALLS, WI 53051

Drawn: DDS
Approved:

date	comments

REVISIONS

Job: 2233-1107
Date: 12-14-07

FLOWOOD, MS

COMFORT SUITES

70 UNITS

Sheet
A-1