DOOR SCHEDULE

DOOR MK	DOOR WIDTH	DOOR HEIGHT	DOOR THK'SS	DOOR MATERIAL	FRAME TYPE	FRAME HEAD	FRAME JAMB	FRAME SILL	FRAME TYPE	FRAME MATERIAL	HARD WARE	LABEL	REMARKS
01	3'-0"	8'-0"	1¾"	ALUM	D			S-5	D	ALUM	PANIC		CARD KEY
02	3'-0"	6'-8"	1¾"	SCWD.	E	H-4	J-4	S-5	E	H.M.	PANIC	90 MINS.	STAIN W/ KEY
03	3'-0"	6'-8"	1¾"	HM/INSUL	A	H-6	J-6	S-5	A	H.M.	PANIC		PAINT
04	3'-0"	6'-8"	1¾"	SCWD.	A	H-2	J-2	S-5	A	H.M.		45 MINS.	STAIN DOOR W/ KEY
05	3'-0"	8'-0"	1¾"	ALUM	D			S-5	D	ALUM	PANIC		CARD KEY
06	3'-0"	6'-8"	1¾"	SCWD.	H	H-2	J-2	S-1	H	H.M.		45 MINS.	STAIN
07	3'-0"	6'-8"	1¾"	SCWD.	A	H-4	J-4	S-5	A	H.M.		90 MINS.	STAIN DOOR W/ KEY
08	3'-0"	6'-8"	1¾"	SCWD.	A	H-1	J-1	S-2	A	H.M.		45 MINS.	PRIVACY SET
09	3'-0"	6'-8"	1¾"	SCWD.	H	H-2	J-2	S-2	H	H.M.		45 MINS.	STAIN
10	3'-0"	6'-8"	1¾"	SCWD.	A	H-1	J-1	S-5	A	H.M.		45 MINS.	STAIN DOOR W/ KEY
11	10'-0"	8'-0"	1¾"	ALUM.	F			S-4	F	ALUM.	PANIC		PAIR DOORS W/CARD KEY
12	10'-0"	8'-0"	1¾"	ALUM.	F			S-2	F	ALUM.	PANIC		PAIR DOORS W/CARD KEY
13	6'-0"	6'-8"	1¾"	SCWD.	J	H-2	J-2	S-3	J	H.M.		45 MINS.	PAIR DOORS
14	6'-0"	6'-8"	1¾"	SCWD.	H	H-1	J-1	S-1	H	H.M.		45 MINS	PAIR DOORS
15	3'-0"	6'-8"	1¾"	SCWD.	G	H-1	J-1	S-2	A	H.M.		45 MINS.	STAIN DOOR W/ KICK PLATE
16	3'-0"	6'-8"	1¾"	SCWD.	A	H-1	J-1	S-1	A	H.M.		45 MINS.	STAIN W/ CARD KEY
17	4'-0"	6'-8"	1¾"	SCWD.	A	H-1	J-1	S-3	A	H.M.			STAIN W/ LOCK KEY
18	3'-0"	6'-8"	1¾"	SCWD.	A	H-1	J-1	S-3	A	H.M.			STAIN W/ CARD KEY
19	3'-0"	6'-8"	1¾"	SCWD.	H	H-1	J-1	S-2	H	H.M.		45 MINS.	STAIN W/ KEY LOCK
20	3'-0"	6'-8"	1¾"	SCWD.	A	H-1	J-1	S-2	A	H.M.		45 MINS.	PRIVACY SET
21	3'-0"	6'-8"	1¾"	SCWD.	A	H-4	J-4	S-5	A	H.M.		90 MINS.	STAIN DOOR W/ KEY
22	3'-0"	6'-8"	1¾"	H.M.	A	H-4	J-4	S-5	A	H.M.		90 MINS.	PAINT DOOR W/ KEY
23	7'-0"	5'-6"		STEEL	K								PAINT DOOR W/ KEY
A	3'-0"	6'-8"	1¾"	SCWD.	A	H-1	J-1	S-3	A	H.M.		20 MINS.	CARD KEY
B	3'-0"	6'-8"	1¾"	SCWD.	A	H-1	J-1	S-1	A	H.M.			PRIVACY SET
C	3'-0"	6'-8"	1¾"	SCWD.	A	H-1	J-1	S-1	A	H.M.			ADA
D	3'-0"	6'-8"	1¾"	SCWD.	A	H-1	J-1	S-3	A	H.M.		45 MINS.	DEAD BOLT CONNECTING

NOTE:

1. ALL DOORS WITH HARD KEY TO HAVE ONE KEY AND A MASTER KEY
2. ALL EXIT DOORS NEED PANIC HARDWARE AND CLOSURE
3. ALL SERVICE DOORS NEED TO HAVE BRUSHED METAL KICK PANEL 2'-0" HIGH
4. ALL INTERIOR DOORS NEED TO BE STAINED U.N.O.
5. ALL EXTERIOR DOORS NEED TO BE PAINTED U.N.O.
6. ALUMINUM DOORS DO NOT NEED PAINT OR STAIN.

HARDWARE SCHEDULE

SET # 1
2 EA. DOORS TO GUEST BEDROOM
2 EA. HINGES PER DOOR
1 EA. CARD READER
1 EA. DOOR BOARD
1 EA. DOR PAY VIEWER
1 EA. DOR N SEAL 310 X 7/0
1 EA. THRESHOLD
1 EA. WALL STOP

SET # 2
3 BEDROOM TO BATH
1 EA. HINGES
1 EA. PRIVACY SET
1 EA. WALL STOP

SET # 3
2 BEDROOM TO CLOSET
MIRROR DOORS
ALL HARDWARE BY DOOR SUPPLIER

SET # 4
2 BEDROOM TO BEDROOM
2 EA. HINGES PER DOOR
2 EA. CONNECTING LATCHES
3 EA. DEADBOLTS
3 EA. DOOR GASKETING
2 EA. DOOR BOARDS
2 EA. WALL STOPS
2 EA. DOOR SWEEPS

SET # 5
DOOR #1 AND #2
1 EA. REMOTE CARD READER
1 EA. INTERCOM & VERSIBLE DOOR
BALANCE OF HARDWARE BY DOOR SUPPLIER

SET # 6
DOOR #3
1 EA. REMOTE CARD READER
BALANCE OF HARDWARE BY DOOR SUPPLIER

SET # 7
DOOR #9
1 EA. REMOTE CARD READER
BALANCE OF HARDWARE BY DOOR SUPPIER

SET # 8
DOOR #10 LAUNDRY
3 EA. HINGES
1 EA. KEYPADDLE CARD READER
1 EA. DOOR CLOSER
1 EA. KICK PLATE
1 EA. WALL STOP

SET # 9
DOOR #4, #7, #15 AND #16
3 EA. HINGES
1 EA. LOCK SET
1 EA. DOOR CLOSER
1 DOOR STOP

SET # 10
DOOR #22
3 EA. HINGES
1 EA. LOCK SET
1 EA. WALL STOP

SET # 11
DOOR #6
DOOR #18 ~~#25~~
1 EA. KEYPAD LOCK
1 EA. DOOR CLOSER
1 EA. PEEPHOLE
1 EA. WALL STOP

SET # 12
DOOR #8
3 HINGES
1 EA. PRIVACY SET
1 EA. KICK PLATE
1 EA. DOOR CLOSER
1 EA. DOOR STOP

SET # 13
DOOR #5
3 EA. HINGES
1 EA. OFFICE LOCK
1 EA. WALL STOP

SET # 14
DOOR #10
3 EA. HINGES
1 EA. LOCK SET
1 EA. DOOR CLOSER
1 EA. DOOR SEAL
1 EA. RAIN DRIP CAP

SET # 15
DOOR #11
6 EA. HINGES
2 EA. LOCK SET
2 EA. HIGH DEAD BOLT
3 EA. WALL STOP

SET # 16
DOORS #13, #24
3 EA. HINGES
1 EA. LOCKSET
1 EA. DOOR CLOSER
1 EA. PERIMETER GASKET
1 EA. WALL STOP

SET # 17
DOOR #14
4 EA. HINGES
1 EA. BATHROOM LOCK
1 EA. DOOR CLOSERS
2 EA. ARMOR PLATES
1 EA. PERIMETER GASKET
1 EA. DOOR STOP

SET # 18
DOOR #20
3 EA. HINGES
1 EA. PRIVACY SET
1 EA. DOOR STOP

SET # 19
DOOR #19
3 EA. HINGES
1 EA. EXIT DEVICE
1 EA. DOOR CLOSER
1 EA. THRESHOLD
1 EA. DOOR SWEEP
1 EA. WEATHERSTRIPPING
1 EA. RAIN DRIP CAP
1 EA. FLOOR STOP
1 EA. KICK PLATE

SET # 20
DOOR #2
3 EA. HINGES
1 EA. EXIT DEVICE
1 EA. DOOR CLOSER
1 EA. KICK PLATE
1 EA. PERIMETER GASKET
1 EA. WALL STOP

SET # 21
DOOR #6
3 EA. HINGES
1 EA. CARD READER
1 EA. DOOR CLOSER
1 EA. PERIMETER GASKET
1 EA. WALL STOP

NOTE, ALL DOORS TO RECEIVE LEVER HANDLE PER ADA REQUIREMENTS

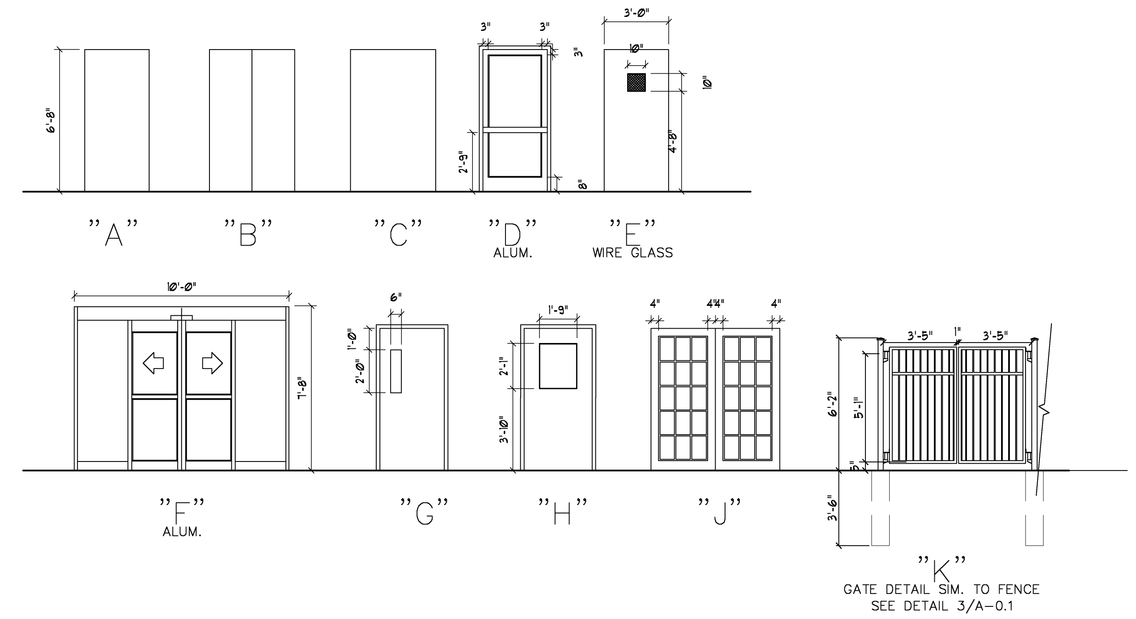

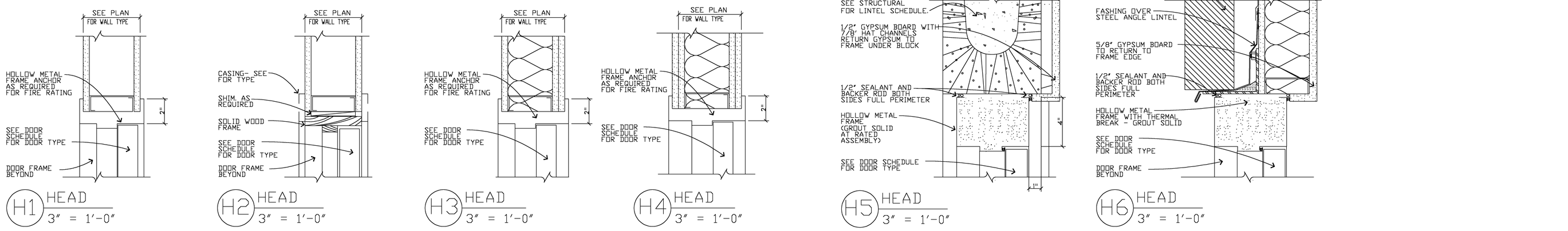

H1 HEAD 3" = 1'-0"
H2 HEAD 3" = 1'-0"
H3 HEAD 3" = 1'-0"
H4 HEAD 3" = 1'-0"
H5 HEAD 3" = 1'-0"
H6 HEAD 3" = 1'-0"

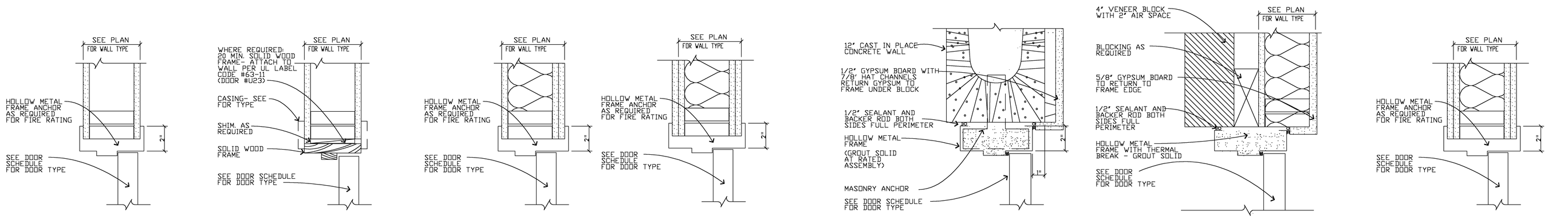

J1 JAMB 3" = 1'-0"
J2 JAMB 3" = 1'-0"
J3 JAMB 3" = 1'-0"
J4 JAMB 3" = 1'-0"
J5 JAMB 3" = 1'-0"
J6 JAMB 3" = 1'-0"
J7 JAMB 3" = 1'-0"

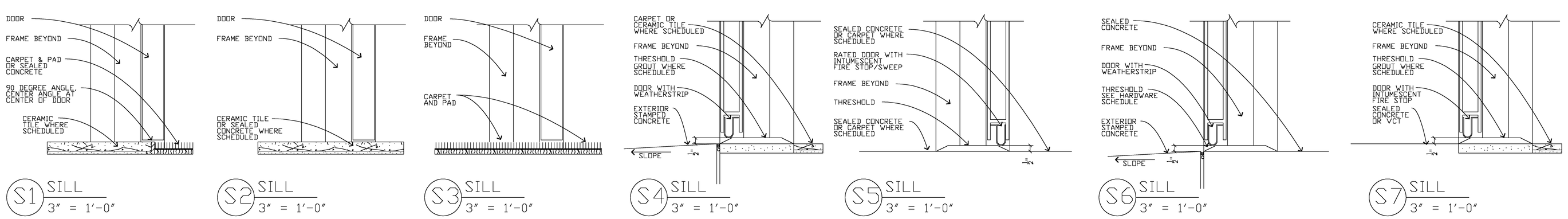

S1 SILL 3" = 1'-0"
S2 SILL 3" = 1'-0"
S3 SILL 3" = 1'-0"
S4 SILL 3" = 1'-0"
S5 SILL 3" = 1'-0"
S6 SILL 3" = 1'-0"
S7 SILL 3" = 1'-0"

RICHARD F. STELDT & ASSOCIATES, LTD.
ARCHITECTS
(262) 502-4500
N85 W16058 APPLETON AVE., MENOMONEE FALLS, WI 53051

Drawn: AAP

Approved:

date	comments
	REVISIONS

Job: 2233-1107

Date: 12-14-07

FLOWOOD, MS

COMFORT SUITES

70 UNITS

Sheet

A-17