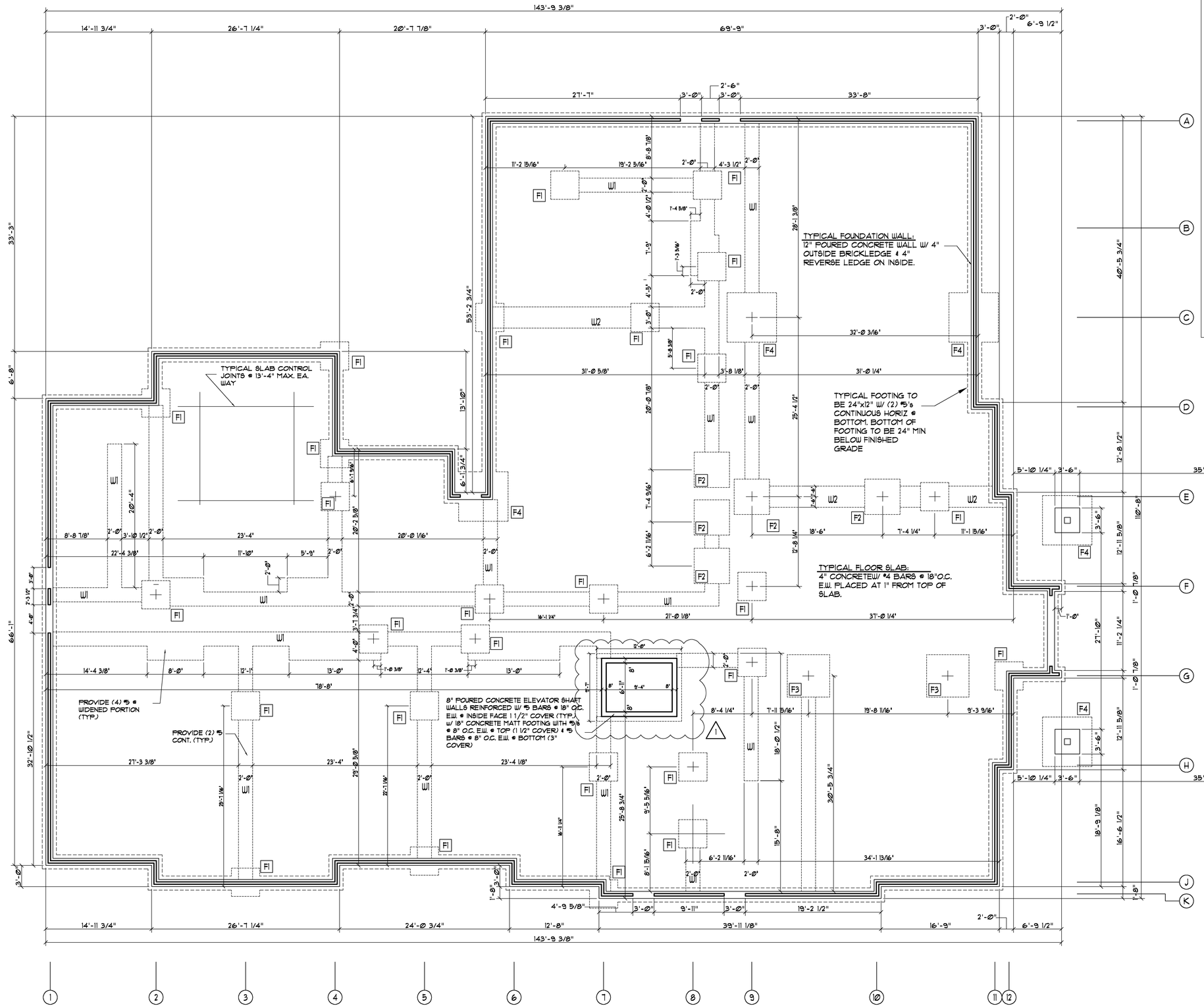

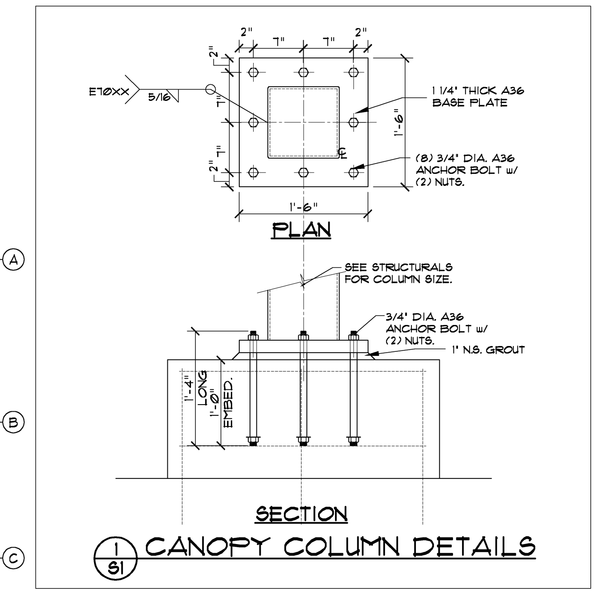

FOUNDATION PLAN

SCALE: 1/8" = 1'-0"

NOTE: ALL INT. COL. FOOTINGS TO BE ISOLATED POURS. ALL INT. COLUMNS TO BE SET ON TOP OF FOOTINGS (NOT ON FLOOR SLAB). IF COLUMNS ARE NOT SET PRIOR TO FLOOR SLAB POUR, PROVIDE OPENING IN SLAB AT EA. COLUMN FOOTING AS REQUIRED, TO ACCEPT COL. BASE PLATES.

RICHARD F. STELDT & ASSOCIATES, LTD. ARCHITECTS
OWNERSHIP OF DOCUMENTS
This document, and the ideas and designs incorporated herein, as an instrument of professional service, is the property of Richard F. Steldt and Associates, Ltd. and is not to be used in whole or in part, for any other project without the written authorization of Richard F. Steldt and Associates, Ltd.

FOOTING SCHEDULE

No.	FOOTING	REINFORCING BARS
F1	4'-0" x 4'-0" x 16" FTG.	(5) #5 REBAR EACH WAY @ BOTTOM
F2	5'-0" x 5'-0" x 16" FTG.	(6) #5 REBAR EACH WAY @ BOTTOM
F3	6'-0" x 6'-0" x 16" FTG.	(7) #5 REBAR EACH WAY @ BOTTOM
F4	7'-0" x 7'-0" x 16" FTG.	(9) #5 REBAR EACH WAY @ BOTTOM

WALL FOOTINGS

No.	FOOTING	CONTINUOUS HORIZONTAL BARS
W1	24" x 12"	(2) #5 BARS CONT. @ BOTTOM
W2	36" x 12"	(3) #5 BARS CONT. @ BOTTOM

NOTE: WALL FOOTINGS TO BE W1 UNLESS NOTED OTHERWISE

COLUMN SCHEDULE

No.	SIZE	BASE PLATE (TxWxL)	ANCHOR BOLTS	T/CONC.
C-1	HSS 4"X4"x5/16"	1/2"x8"x0'-8"	(4)- 3/4" DIA.	SEE PLAN
C-2	HSS 6"X6"x5/16"	1"x12"x1'-0"	(4)- 3/4" DIA.	SEE PLAN
C-3	HSS 10"X10"x1/2"	1"x16"x1'-4"	(8)- 3/4" DIA.	SEE PLAN

DESIGN CRITERIA: (IBC 2006)

ROOF D.L (TOP & BOT.) . . . . . 18 P.S.F.
ROOF LIVE. . . . . 20 P.S.F.
GROUND SNOW. . . . . 5 PSF

FLOOR D.L. . . . . 25 P.S.F.
ROOM FLOOR L.L. . . . . 40 P.S.F.
LOBBY CORRIDOR & STAIRS L.L. . . . . 100. P.S.F.
STORAGE ROOM L.L. . . . . 125 P.S.F.

WIND LOADS: ASCE 7-05
BASIC WIND SPEED: 100 MPH
IMPORTANCE FACTOR: 1.0
EXPOSURE: C
INTERNAL PRESSURE COEFFICIENT: +/-0.18

WALLS:
WINDWARD: 19.1 PSF
LEEWARD: -6.0 PSF
ROOFS:
WINDWARD: -7.7 PSF
LEEWARD: -13.1 PSF

SEISMIC LOADS: ASCE 7-05
SEISMIC USE GROUP: II
Sds: 0.205
Sd1: 0.136
SEISMIC DESIGN CATEGORY: C
SEISMIC IMPORTANCE FACTOR: 1.0
ANALYSIS PROCEDURE: EQUIVALENT LATERAL FORCE PROCEDURE
BASIC SEISMIC FORCE RESISTING SYSTEM: BEARING WALL SYSTEM W/ LIGHT FRAME WALLS W/ STRAP BRACING

* MAXIMUM BASIC VALUES GIVEN - REFER TO LOCAL CODE FOR DETAILED REQUIREMENTS.

RICHARD F. STELDT
ARCHITECT
(262) 502-4500
N85 W16058 APPLETON AVE., MENOMONEE FALLS, WI 53051

Drawn: SEB
Approved:

date	comments
3-26-08	REVISED PER ADDENDUM 1

REVISIONS

Job: 2233-1107
Date: 12-14-07

COMFORT SUITES
FLOWOOD, MS
70 UNITS

Sheet
S-1