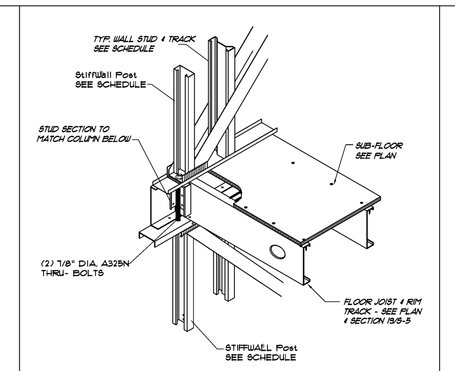

SHEAR WALL CONNECTION • EXT. WALL (26)

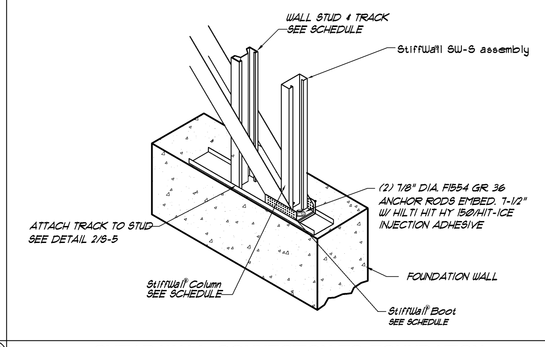

SHEAR WALL CONNECTION TO FOUNDATION, (25)

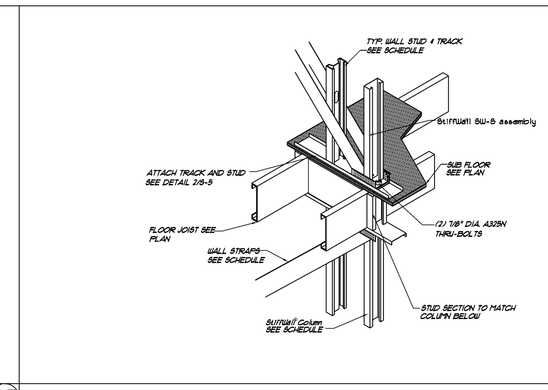

SHEAR WALL CONNECTION • INT. WALL (24)

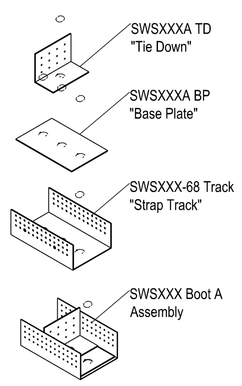

SWS600L Boot A Assembly

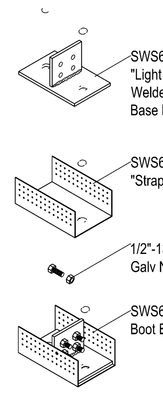

SWS600L Boot B Assembly

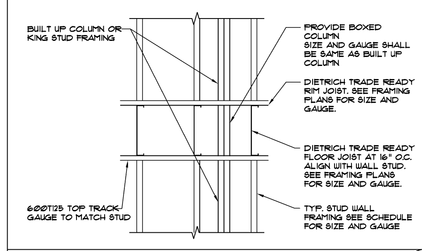

KING STUD DETAIL (21)

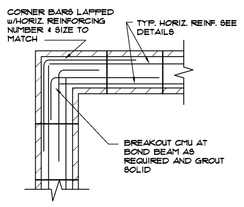

MASONRY CORNER REINFORCING (22)

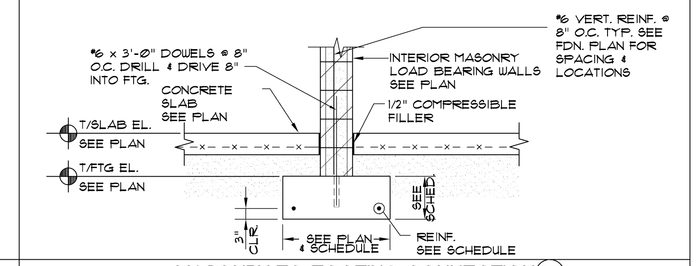

MASONRY TO FOOTING CONNECTION (23)

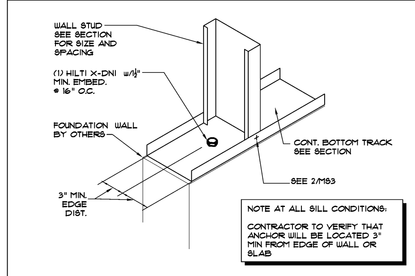

BASE DETAIL • FOUNDATION (1)

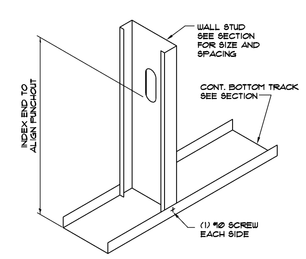

STUD TO TRACK CONNCTION (2)

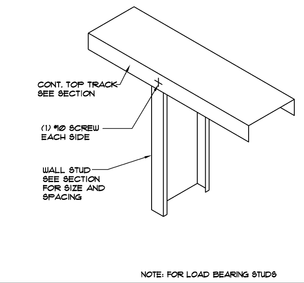

STUD TO TRACK CONNCTION (3)

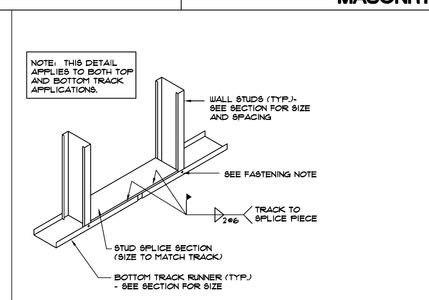

DETAIL (4)

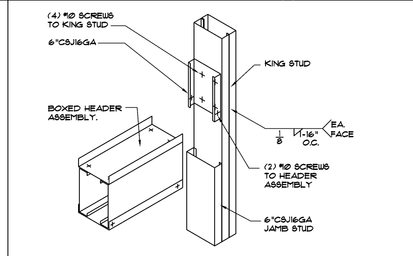

DETAIL (5)

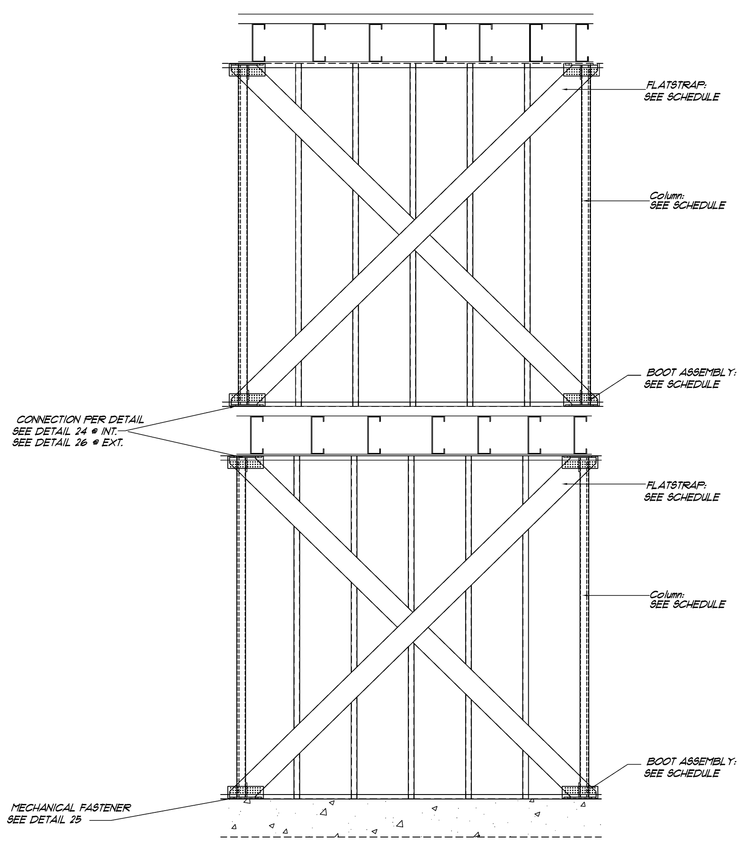

SHEAR WALL ELEVATION MULTI STORY
2-4 STORIES

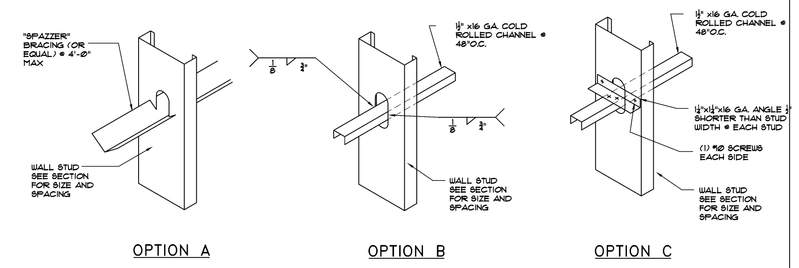

BRIDGING ATTACHMENTS (6)

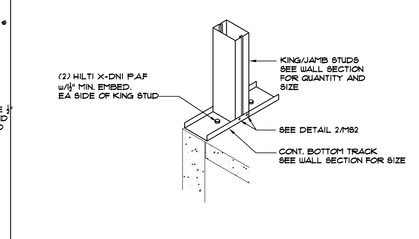

KING STUD CONNCTION (7)

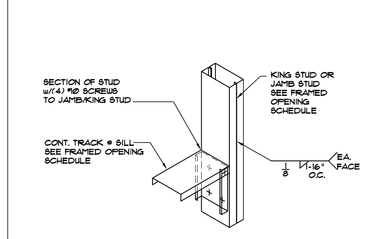

DETAIL (8)

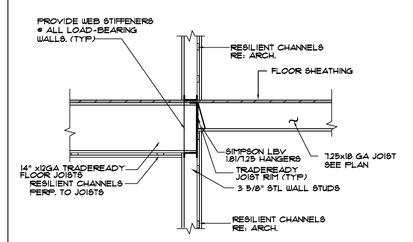

SECTION at CORRIDOR JOIST BEARING (9)

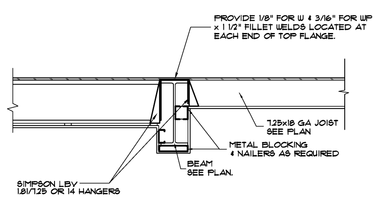

SECTION at CORRIDOR BEAM (10)

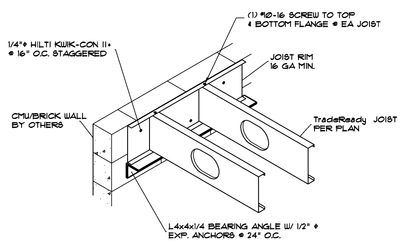

JOIST BEARING at MASONRY (11)

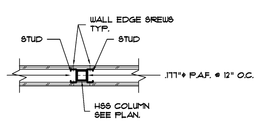

HSS COLUMN IN WALL (12)

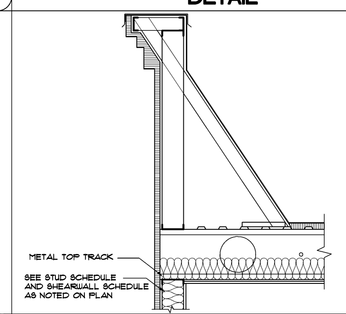

TYP. EXT. BEARING WALL (13)

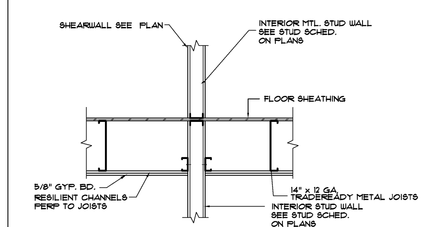

TYP. UNIT SEPARATION WALL (14)

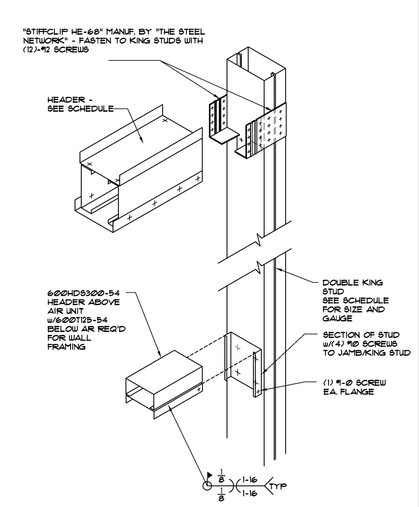

WINDOW and HVAC HDR DETAIL (20)

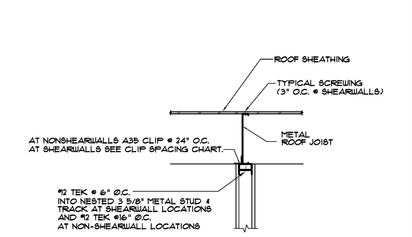

ROOF TRUSSES at PARTY WALLS (17)

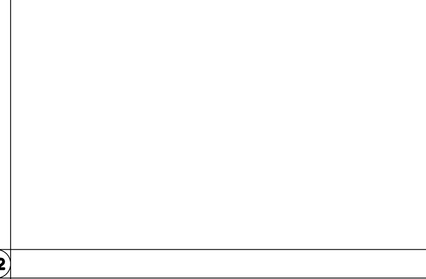

ALTERNATE TO DETAIL 17

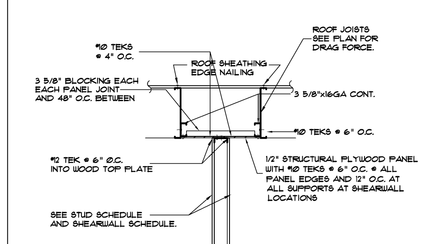

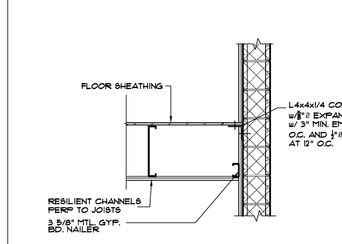

DETAIL at SEPARATION WALL ABOVE (15)

JOIST PARALLEL TO EXTERIOR WALL (16)

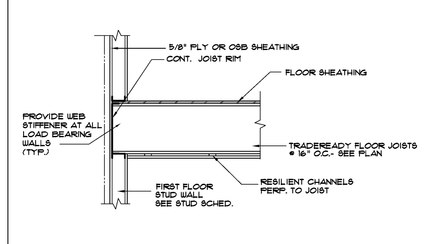

JOIST PARALLEL TO ELEV. WALL (18)

ONE END JOIST BEARING at WALL (19)

RICHARD F. STELDT & ASSOCIATES, LTD. ARCHITECTS
OWNERSHIP OF DOCUMENTS
This document, and the ideas and designs incorporated herein, as an instrument of professional service, is the property of Richard F. Steldt and Associates, Ltd. and is not to be used in whole or in part, for any other project without the written authorization of Richard F. Steldt and Associates, Ltd.

RICHARD F. STELDT
ARCHITECT
(262) 502-4500
N85 W16058 APPLETON AVE., MENOMONEE FALLS, WI 53051

Drawn: SEB
Approved:

date	comments
REVISIONS	

Job: 2233-1107
Date: 12-14-07

FLOWOOD, MS
70 UNITS

Sheet
S-5