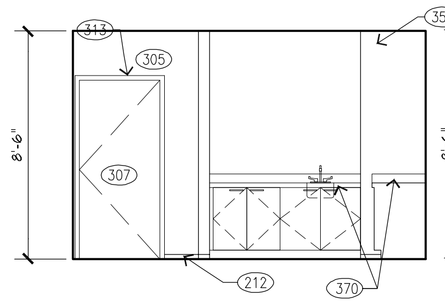

13 INTERIOR ELEVATION
1/4"=1'-0"
AX-X-X

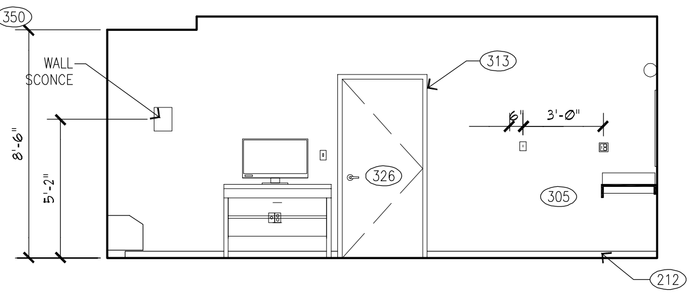

12 INTERIOR ELEVATION
1/4"=1'-0"
AX-X-X

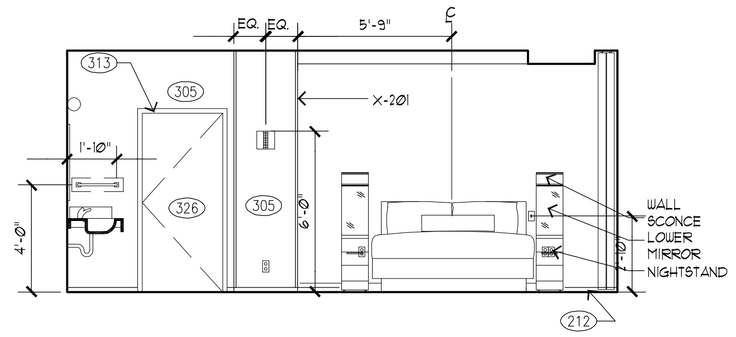

11 INTERIOR ELEVATION
1/4"=1'-0"
AX-X-X

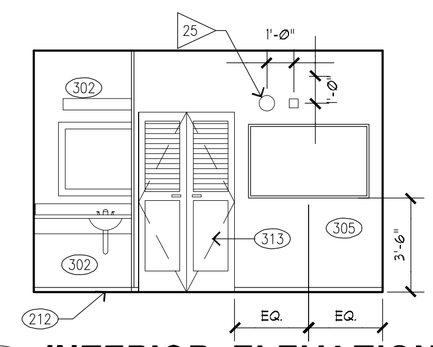

10 INTERIOR ELEVATION
1/4"=1'-0"
AX-X-X

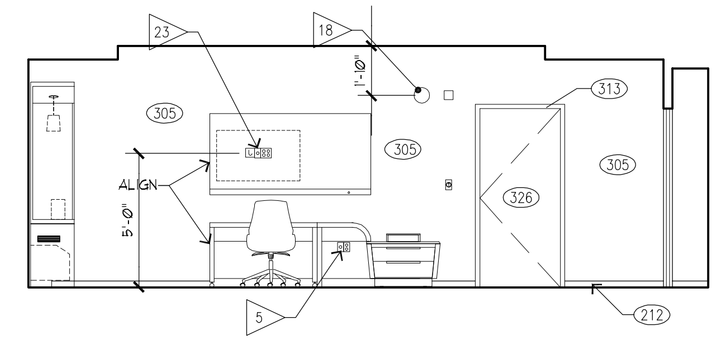

9 INTERIOR ELEVATION
1/4"=1'-0"
AX-X-X

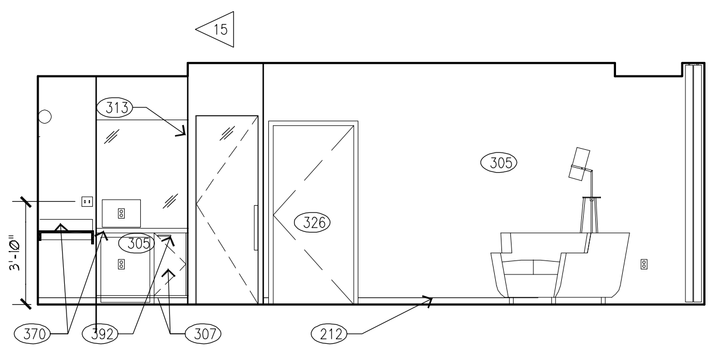

8 INTERIOR ELEVATION
1/4"=1'-0"
AX-X-X

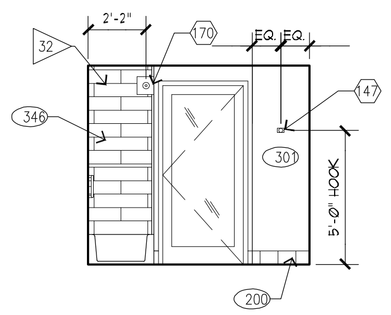

7 INTERIOR ELEVATION
1/4"=1'-0"
AX-X-X

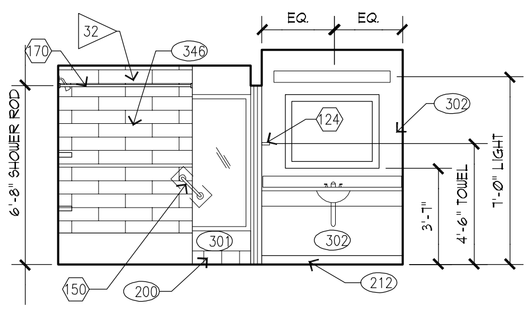

6 INTERIOR ELEVATION
1/4"=1'-0"
AX-X-X

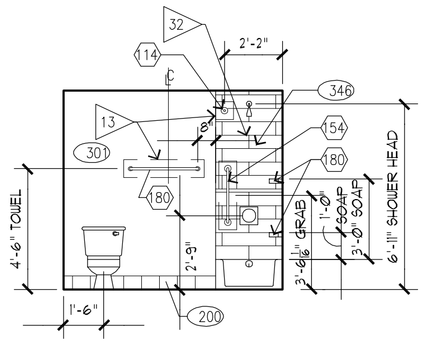

5 INTERIOR ELEVATION
1/4"=1'-0"
AX-X-X

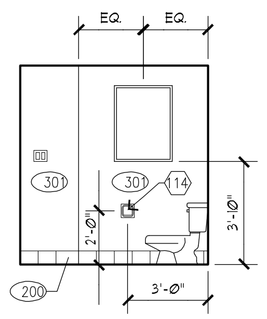

4 INTERIOR ELEVATION
1/4"=1'-0"
AX-X-X

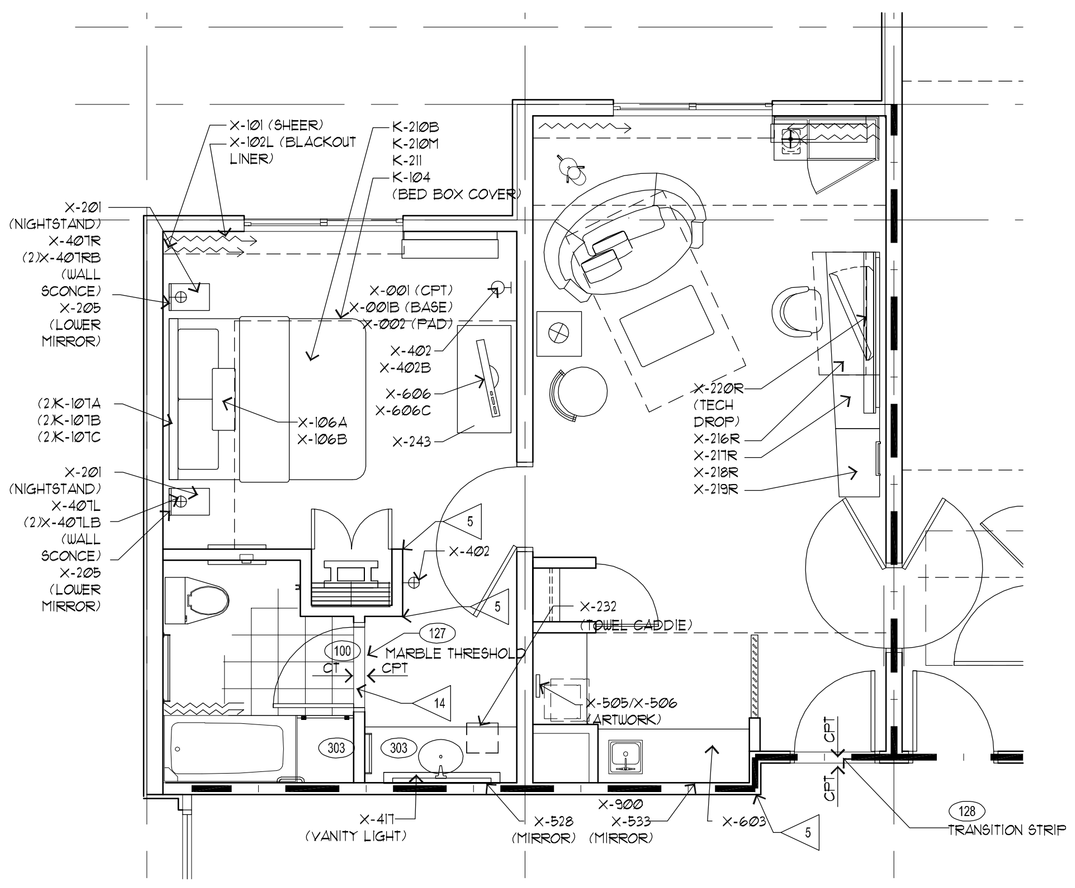

2 KING SUITE FURNITURE PLAN
1/4"=1'-0"
AX-X-X

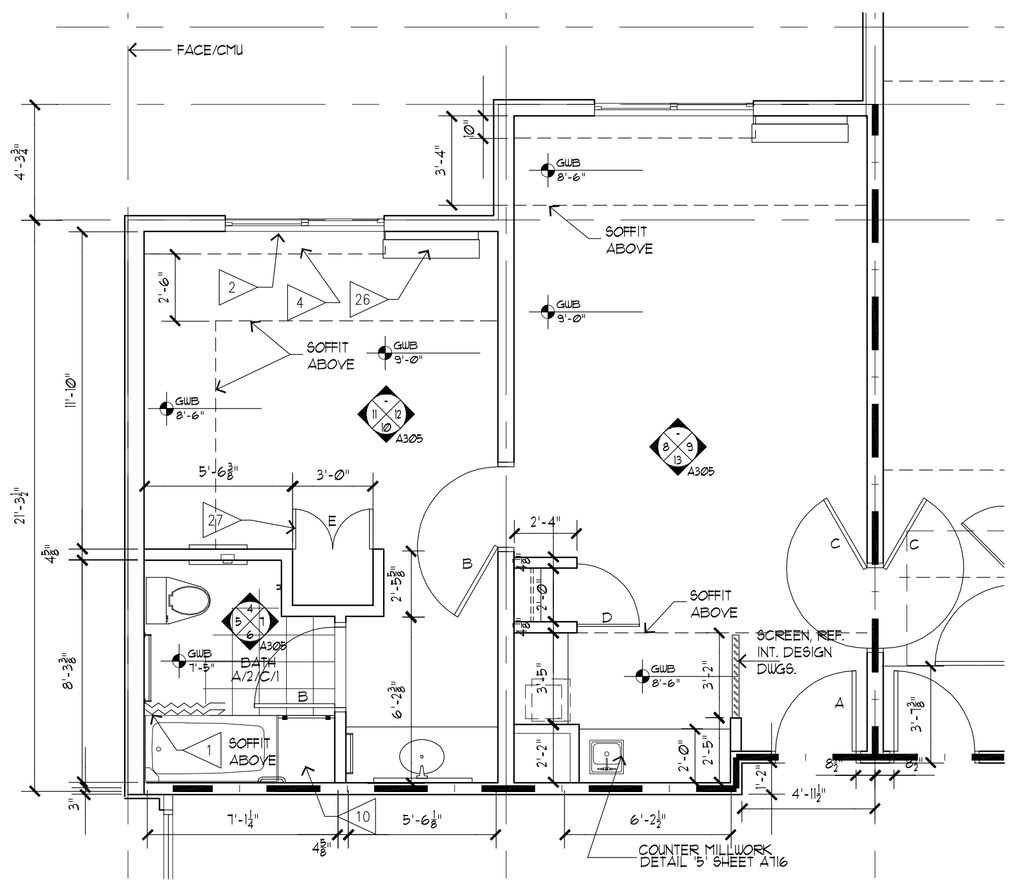

1 KING SUITE PLAN
1/4"=1'-0"
AX-X-X

3 NOT USED
1/4"=1'-0"
AX-X-X

8/29/2013-CYNERGY UPDATE

Richard Molenaar
ARCHITECT

FINISH SCHEDULE

Reference Marriott Interior Finish Index for Courtyard Finish Specifications

100 — Room Number
Room Name — Room Name

A/1/A/1
- Ceiling Finish
- Wall Finish
- Base Finish
- Floor Finish

Floors
- A. Thin Set Decorative Porcelain Tile 12"x12"
- B. Thin Set Decorative Porcelain Tile 12"X24"
- C. Carpet and Pad
- D. Carpet- Direct Glue Down
- E. Vinyl Composition Tile
- F. Wood grain Look Porcelain Tile-26"x6"
- G. Epoxy Resin Over Concrete
- H. Level Loop carpet Tile
- J. Ceramic Tile 2"x2"
- K. Sealed Concrete
- L. Porcelain Tile, 6"x12"

Base
1. 4" Vinyl
2. Porcelain Tile 4"x12"
3. 4" Carpet w/Top Binding Edge
4. Ceramic Tile 6"x6"
5. Porcelain Tile 13"x6"
6. Wood Base
7. Ceramic Tile, 6"x6"
8. None Required
9. Epoxy Resin

Walls
- A. Painted Gyp. Bd. (Eggshell Oil Base Enamel)
- B. Ceramic Tile
- C. Vinyl Wallcovering
- D. Painted Gyp. Bd. (Semi-gloss Latex Enamel)
- E. Painted Concrete Masonry Units (Epoxy Paint)
- F. Painted Gyp. Bd.-Flat
- G. Textured -acrylic based splatter knock-down finish to meet franchisor and/or Owner specifications.
- H. Embossed FRP Panels

Ceilings
1. Painted Gyp. Bd. (Smooth Finish) Colour Selected By Interior Designer.
2. Susp. Panel System by Certain Teed Corp. Model:Cashmere CM-450, Colour: White 24"x24"x¾" Tegular Lay-In for 9/16" Grid.
3. Susp. Panel System by USG Interiors, Inc. Pattern: 56091 Clean Room ClimaPlus Colour:Standard White 24"x48"x¾" Tegular Lay-In Panels Grid: Crane Composites, Inc. Mod: Sanigrid II Fiberglass Colour: White
4. Textured -acrylic based splatter knock-down finish to meet franchisor and/or Owner specifications.

REGISTERED ARCHITECT
Richard Molenaar
Memphis, TN
STATE OF MISSISSIPPI
9-1-11

PROJECT NAME:
COURTYARD Marriott
Riverwind Drive Pearl, Mississippi

SHEET TITLE:
Typical King Suite
Guest Room Plans - Shower

PROJECT NO. 09017
LATEST REVISION:
DRAWN BY: CJ
CHECKED BY: RM
SHEET NUMBER: A305
DATE: 09/01/2011