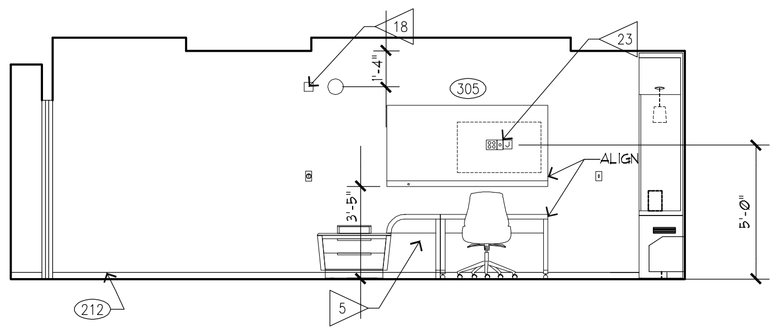

13 INTERIOR ELEVATION
1/4" = 1'-0" AX-X-X

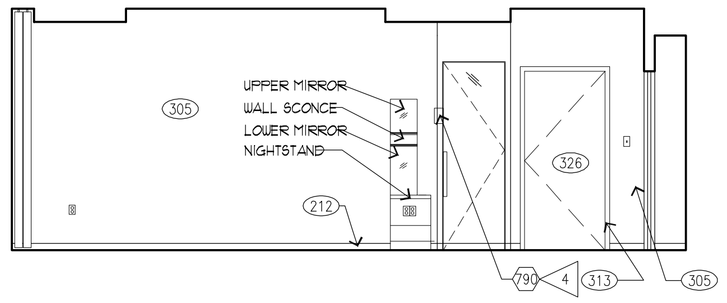

12 INTERIOR ELEVATION
1/4" = 1'-0" AX-X-X

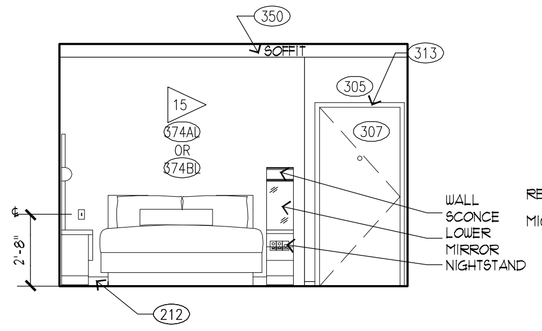

11 INTERIOR ELEVATION
1/4" = 1'-0" AX-X-X

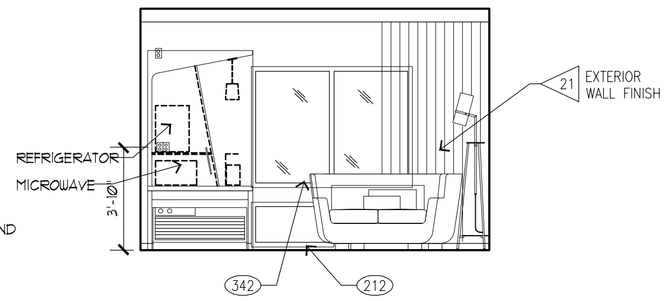

10 INTERIOR ELEVATION
1/4" = 1'-0" AX-X-X

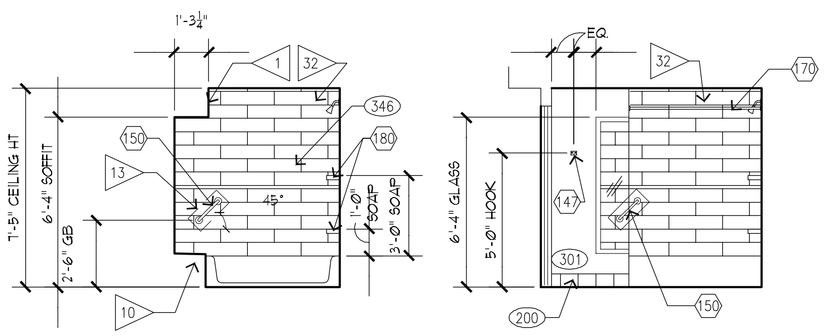

9 INTERIOR ELEVATION
1/4" = 1'-0" AX-X-X

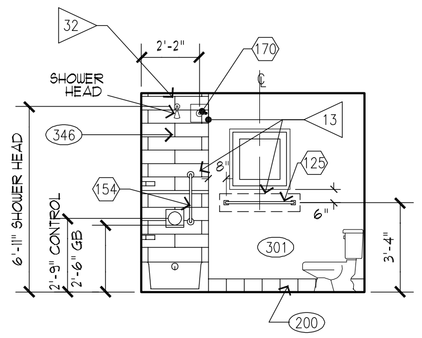

8 INTERIOR ELEVATION
1/4" = 1'-0" AX-X-X

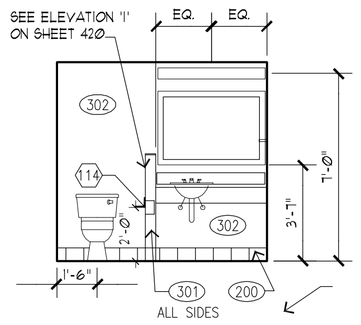

7 INTERIOR ELEVATION
1/4" = 1'-0" AX-X-X

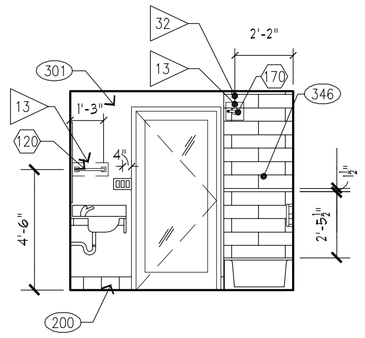

6 INTERIOR ELEVATION
1/4" = 1'-0" AX-X-X

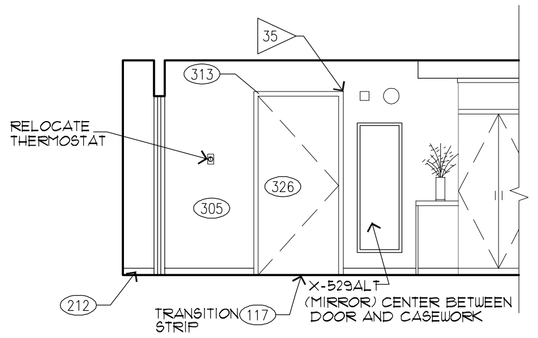

5 INTERIOR ELEVATION
1/4" = 1'-0" AX-X-X

4 PARTIAL ELEV. W/CONNECT'G DOOR
1/4" = 1'-0" AX-X-X

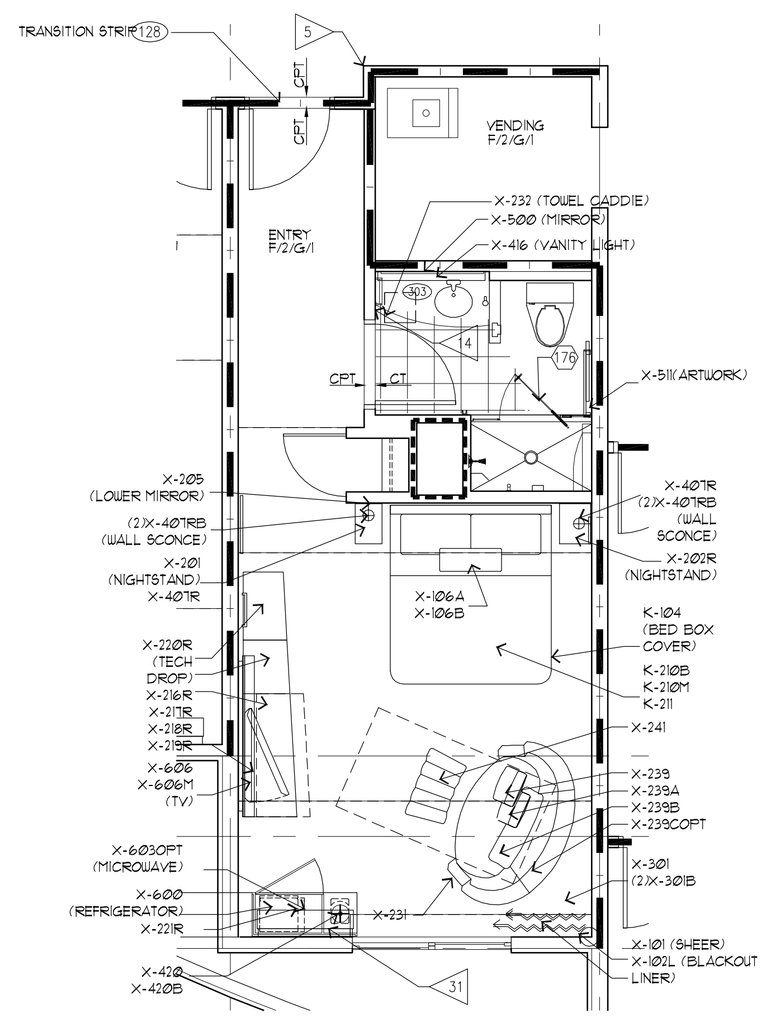

2 KING ROOM FURNITURE LAYOUT
1/4" = 1'-0" AX-X-X

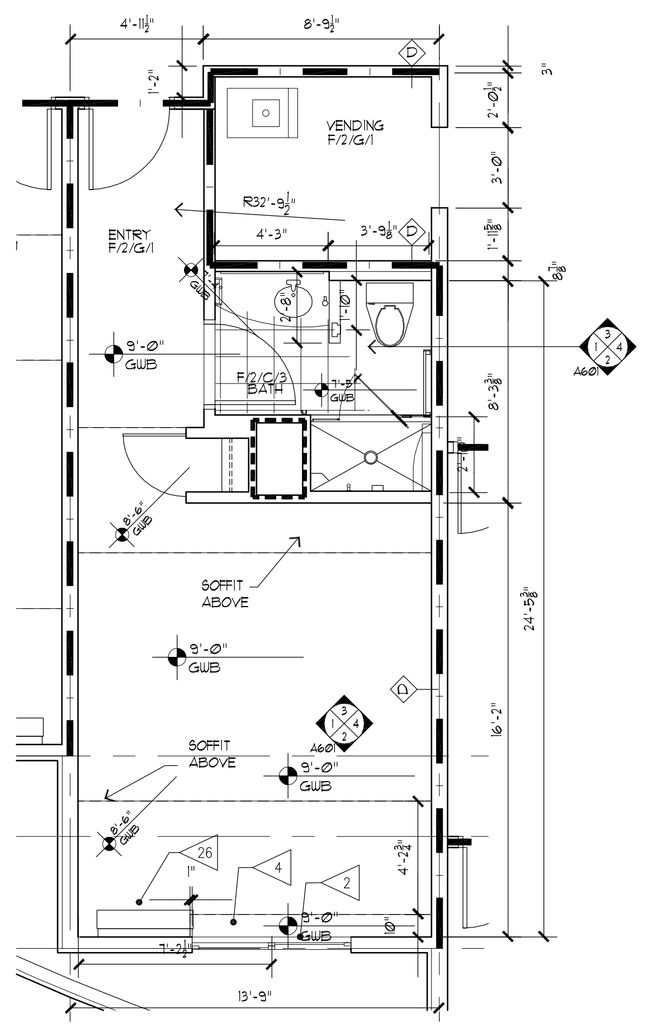

3 NOT USED
1/4" = 1'-0" AX-X-X

1 MODIFIED II KING ROOM PLAN
1/4" = 1'-0" AX-X-X

CRITERIA NOTES

1. ALUM. SLIDING DOOR IS ALLOWED IN LIEU OF WINDOW WHERE GUESTROOMS HAVE DIRECT ACCESS TO THE COURTYARD (1ST FLOOR). PROVIDE CHARLIE BARS ON ALL SLIDING GLASS DOORS AND FIRST FLOOR WINDOWS.
2. WHERE DRAPERY RODS ARE USED AT WINDOWS OR SLIDING DOORS, PROVIDE CONTINUOUS SOLID WOOD BLOCKING IN CEILING FOR ATTACHMENT.
3. ALL EXTERIOR CORNERS SHALL HAVE FULL HEIGHT CORNER GUARDS, (382) PER FINISH INDEX. SEE ELEVATIONS.
4. IRONING BOARD AND IRON RACK MOUNTED INSIDE OF CLOSET.
5. PLUG TABLE LAMP INTO THIS OUTLET, OPTIONAL.
6. SHELF AND CLOSET ROD
7. GANG OUTLETS AND SWITCHES AT THIS LOCATION @ HEIGHT SHOWN.
8. WALL OUTLETS SHALL NOT OCCUR IN SAME WALL CAVITY OF ADJACENT GUESTROOMS, TYPICAL.
9. PROVIDE BLOCKING FOR ACCESSORIES.
10. START WITH FULL TILE WHERE SHOWN.
11. TYPICAL CEILING HEIGHT IS 9'-0", USE TRIM (354) AND PAINT (401) ON SOFFIT. SEE ELEVATIONS.
12. EXHAUST FAN/LIGHT LOCATION (SWITCH WITH MAIN ROOM LIGHT). WHEN CONTINUOUS VENTING IS USED, INSTALL LIGHT ONLY, R41.
13. OPTIONAL PHONE OUTLET FOR DESK.
14. OPTIONAL DEDICATED OUTLET FOR OPTIONAL MICROWAVE.
15. GRAPHIC WALL MURAL. REFERENCE IFI FOR OPTIONS.
16. MASTER LIGHT SWITCH WITH SIGNAGE TO CONTROL ALL HARDWIRED LIGHTS IN GUESTROOM, WITH EXCEPTION OF BATHROOM.
17. INSTALL STRAIGHT CURTAIN ROD AT THIS OPTION.
18. AT HEARING IMPAIRED ROOM ONLY.
19. VERIFY THAT SLEEVE EXTENDS 8" TO 10" INTO ROOM FROM INSIDE FACE OF EXTERIOR WALL, AND THAT OUTLET FOR PTAC IS BELOW PTAC.
20. INSTALL WELCOME SCONCE AS SHOWN IN KING ROOMS 211, 311, 411 & KING EXT. ROOMS 215,315, 415.
21. TEXTURED FINISH, AT EXTERIOR WALL, USE (379)
22. RUN TILES TO CEILING & SCRIBE.
23. PROVIDE CAT 5E CABLE TO JUNCTION BOX - NO CONNECTED DEVICE - WITH BLANK FACEPLATE FOR FUTURE USE.
24. ATTACH ROBE HOOK TO GLASS PANEL.
25. DRAPERY PULL WANDS ARE LOOP TYPE HANDLES AND 48" MAX AFF
26. COORDINATE LOCATION OF GRAPHIC WALL MURAL WITH ROBE HOOK LOCATION.
27. INSTALL STRAIGHT CURTAIN ROD AT THIS OPTION.
28. PROVIDE MILLWORK BASE FOR REFRIGERATOR TO SIT ON.
29. WRAP DRAINAGE AND SUPPLY PIPES WITH INSULATING MATERIAL
30. REFER TO SHEET 700 SERIES SHEETS FOR MILLWORK DETAILS
31. DESIGNER TO COORDINATE WINDOW LOCATION AND PTAC LOCATION WITH DIMENSIONS AND LOCATION OF HOSPITALITY CABINET
32. PROVIDE CORNER GUARDS ON ALL OUTSIDE CORNER, (380) ,TYP WHERE VUC (305) IS USED
33. PAINT GUESTROOM CEILINGS (401), PORTAL CEILINGS (350), & BATHROOM CEILINGS (400)

SYMBOL LEGEND

(318)	FINISH TAG -REFER TO INTERIOR DESIGN PLANS & SPECIFICATIONS
(165)	ACCESSORY TAG -COORDINATE WITH FRANCHISE DECOR THEME
X-000	FURNISHING REFERENCE -REFER TO INTERIOR DESIGN SPECIFICATIONS.
(A)	PARTITION/WALL TYPE TAG -REFER TO SHEET A902
J	JUNCTION, PULL OR TAP BOX, CEILING, WALL OR FLOOR MOUNTED

8/29/2013-CYNERGY UPDATE

Richard Molenaar
ARCHITECT

FINISH SCHEDULE

Reference Marriott Interior Finish Index for Courtyard Finish Specifications

100 — Room Number
Room Name — Room Name

A/1/A/1
- Ceiling Finish
- Wall Finish
- Base Finish
- Floor Finish

Floors
- A. Trim Set Decorative Porcelain Tile 12"x12"
- B. Trim Set Decorative Porcelain Tile 12"X24"
- C. Carpet and Pad
- D. Carpet- Direct Glue Down
- E. Vinyl Composition Tile
- F. Wood grain Look Porcelain Tile-26"x6"
- G. Epoxy Resin Over Concrete
- H. Level Loop carpet Tile
- J. Ceramic Tile 2"x2"
- K. Sealed Concrete
- L. Porcelain Tile, 6"x12"

Base
1. 4" Vinyl
2. Porcelain Tile 4"x12"
3. 4" Carpet w/Top Binding Edge
4. Ceramic Tile 6"x6"
5. Porcelain Tile 13"x6"
6. Wood Base
7. Ceramic Tile, 6"x6"
8. None Required
9. Epoxy Resin

Walls
- A. Painted Gyp. Bd. (Eggshell Oil Base Enamel)
- B. Ceramic Tile
- C. Vinyl Wallcovering
- D. Painted Gyp. Bd. (Semi-gloss Latex Enamel)
- E. Painted Concrete Masonry Units (Epoxy Paint)
- F. Painted Gyp. Bd.-Flat
- G. Textured -acrylic based splatter knock-down finish to meet franchisor and/or Owner specifications.
- H. Embossed FRP Panels

Ceilings
1. Painted Gyp. Bd. (Smooth Finish) Colour Selected By Interior Designer.
2. Susp. Panel System by Certain Teed Corp. Model:Cashmere CM-450, Colour: White 24"x24"x¾" Tegular Lay-In for 9/16" Grid.
3. Susp. Panel System by USG Interiors, Inc., Pattern: 56091 Clean Room ClimaPlus Colour:Standard White 24"x48"x¾" Tegular Lay-In Panels Grid: Crane Composites, Inc. Mod: Sanigrid II Fiberglass Colour: White
4. Textured -acrylic based splatter knock-down finish to meet franchisor and/or Owner specifications.

REGISTERED ARCHITECT
Richard Molenaar
Memphis, TN
STATE OF MISSISSIPPI
9-1-11

PROJECT NAME:
COURTYARD Marriott
Riverwind Drive Pearl, Mississippi

SHEET TITLE:
Modified II King Guest Room Plans

PROJECT NO. 09017	LATEST REVISION:
DRAWN BY: CJ CHECKED BY: RM	SHEET NUMBER: A307
DATE: 9/01/2011	