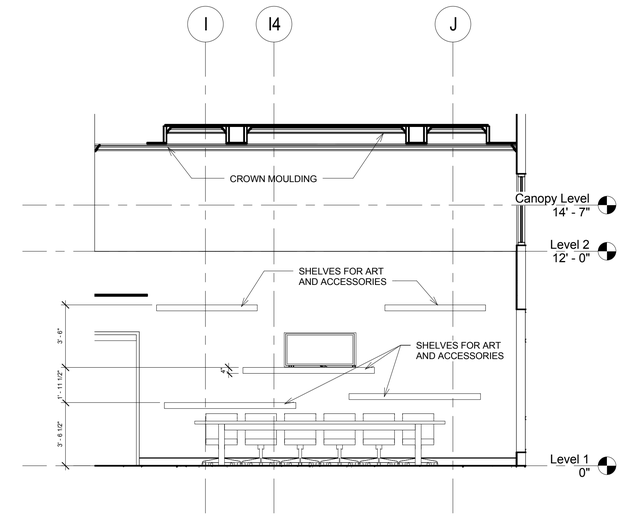

1 Elevation Lobby Wall
1/4" = 1'-0"

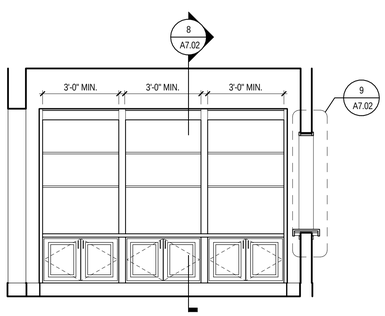

9 ELEVATION
3/8" = 1'-0"

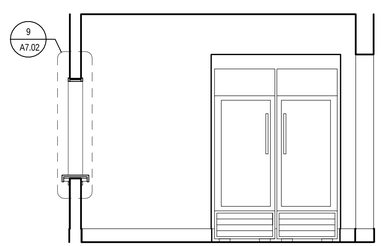

10 ELEVATION
3/8" = 1'-0"

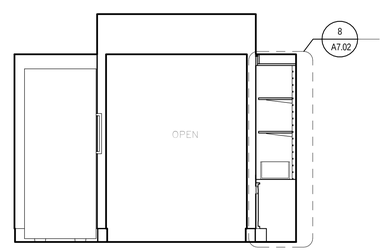

4 ELEVATION
3/8" = 1'-0"

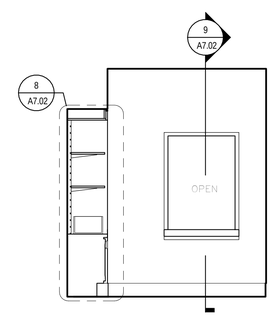

5 ELEVATION
3/8" = 1'-0"

M I S H R A
ARCHITECTURE PLLC

6800 S Creek Rd, Charlotte, NC 28277
Ph:(704) 625-6554 Fax:(704) 919-5822
EMAIL:ashish@mishraarch.com
WEB: www.mishraarch.com

CIVIL:
David Lane Beaird & Associates, Inc.
105 Commercial Parkway
West Monroe, LA 71294
Phone: (318) 388-3227
Email:fgadberry@dlbengineering.com

STRUCTURAL:
WGPM, Inc.
11220 Elm Lane, Suite 201
Charlotte, NC 28277
Phone: (704) 542-7199
Fax: (704) 542-7195
Email: lwright@wgpminc.com

ELECTRICAL:
Ritter Engineering
1043 Arroyo Vista Lane
Matthew, NC 28014
Phone: (704) 516-0385
Fax: (704) 644-1464
Email: shane@rittereng.com

MECHANICAL:
Shultz Engineering Group, P.C.
212 North McDowell St., Suite 204
Charlotte, NC 28204
Phone: (704) 334-7363
Fax:(704) 347-0093
Email: don@shultzeg.com

REVISIONS		
No.	Date	Description

Information contained on this drawing and in all digital files associated is authorized for use on the project named herein only and is the property of MISHRA ARCHITECTURE PLLC and may not be reproduced in any manner without express written or verbal permission from authorized individuals. Original drawing is 24"x36" and scales are as indicated.©2013 MISHRA ARCHITECTURE PLLC

KEY PLAN

Southern Hospitality Services

Hampton Inn and Suites

5400 I-20 & Frontage Rd.
Monroe, LA 71201

Drawing Title
Interior Elevations

Phase
Construction Documents

Project No.	12-111
Prepared by	Author
Checked by	Checker
Date	Sept. 16, 2013

Sheet No.
A601

Released for
PERMIT ONLY

Hampton Inn and Suites

4/14/2014 3:19:35 PM