98 GUESTROOM, 5 STORY, INDOOR POOL

SITE AREA 111,013± SQ. FT. = 2.55± ACRES

NUMBER OF PARKING REQ'D: 98 SPACES NUMBER OF PARKING PROVIDED: 110 (6 ACCESSIBLE SPACES)

RECAP:

34 K	(KING)
2 K ♿	(KING ACCESSIBLE)
14 DK	(DELUXE KING)
45 DQ	(DOUBLE QUEEN)
3 DQ ♿	(DOUBLE QUEEN ACCESSIBLE)

98 TOTAL UNITS

1ST FLOOR (2 UNITS)

124	KING
125	KING

2ND FLOOR (21 UNITS)

200	KING
201	KING
202	KING
203	KING
204	DELUXE KING
205	DELUXE KING
206	DOUBLE QUEEN
207	DOUBLE QUEEN
208	DOUBLE QUEEN
209	DOUBLE QUEEN
210	DOUBLE QUEEN
216	DOUBLE QUEEN
217	DOUBLE QUEEN (HEARING IMPAIRED)
218	DOUBLE QUEEN
219	DOUBLE QUEEN (HEARING IMPAIRED)
220	DELUXE KING
221	ACCESSIBLE KING ♿
222	KING
223	KING (HEARING IMPAIRED)
224	KING
225	KING (HEARING IMPAIRED)

3RD FLOOR (25 UNITS)

300	KING
301	KING
302	KING
303	KING
304	DELUXE KING
305	DELUXE KING
306	DOUBLE QUEEN
307	DOUBLE QUEEN
308	DOUBLE QUEEN
309	DOUBLE QUEEN
310	DOUBLE QUEEN
312	ACCESSIBLE DOUBLE QUEEN ♿
313	DOUBLE QUEEN
314	DOUBLE QUEEN
315	DOUBLE QUEEN
316	DOUBLE QUEEN
317	DOUBLE QUEEN
318	DOUBLE QUEEN
319	DOUBLE QUEEN
320	DELUXE KING
321	ACCESSIBLE KING ♿
322	KING
323	KING
324	KING
325	KING

4TH FLOOR (25 UNITS)

400	KING
401	KING
402	KING
403	KING
404	DELUXE KING
405	DELUXE KING
406	DOUBLE QUEEN
407	DOUBLE QUEEN
408	DOUBLE QUEEN
409	DOUBLE QUEEN
410	DOUBLE QUEEN
412	ACCESSIBLE DOUBLE QUEEN ♿
413	DOUBLE QUEEN
414	DOUBLE QUEEN
415	DOUBLE QUEEN
416	DOUBLE QUEEN
417	DOUBLE QUEEN
418	DOUBLE QUEEN
419	DOUBLE QUEEN
420	DELUXE KING
421	DELUXE KING
422	KING
423	KING
424	KING
425	KING

5TH FLOOR (25 UNITS)

500	KING
501	KING
502	KING
503	KING
504	DELUXE KING
505	DELUXE KING
506	DOUBLE QUEEN
507	DOUBLE QUEEN
508	DOUBLE QUEEN
509	DOUBLE QUEEN
510	DOUBLE QUEEN
512	ACCESSIBLE DOUBLE QUEEN ♿
513	DOUBLE QUEEN
514	DOUBLE QUEEN
515	DOUBLE QUEEN
516	DOUBLE QUEEN
517	DOUBLE QUEEN
518	DOUBLE QUEEN
519	DOUBLE QUEEN
520	DELUXE KING
521	DELUXE KING
522	KING
523	KING
524	KING
525	KING

AREA SUMMARY	SQ. FT.
LOBBY LEVEL	12,881
LEVEL 2	10,975
LEVEL 3	11,789
LEVEL 4	11,789
LEVEL 5	11,789
TOTAL GROSS BUILDING AREA	59,223
BUILDING AREA PER ROOM	604

RICHARD F. STELDT & ASSOCIATES, LTD. ARCHITECTS
OWNERSHIP OF DOCUMENTS
This document, and the ideas and designs incorporated herein, as an instrument of professional service, is the property of Richard F. Steldt and Associates, Ltd. and is not to be used in whole or in part, for any other project without the written authorization of Richard F. Steldt and Associates, Ltd.

GENERAL DATA	
BUILDING USE GROUP	R-1
CAPACITY	98 GUESTROOMS:
CONSTRUCTION CLASSIFICATION	TYPE 2B
	(FULLY SPRINKLERED)
FIRE SUPRESSION	TYPE 13
GOVERNING CODES	2006 INTERNATIONAL BUILDING CODE & 2006 IMC
	LIFE SAFETY (2006 EDITION)
	2005 NEC

NOTES:

- ALL INTERIOR FINISH CLASS RATINGS TO COMPLY WITH SECTION 16-3.3 OF NFPA 101.
- ALL COMMON AREAS OF BUILDING TO BE ACCESSIBLE
- PROVIDE DETECTABLE WARNINGS ON PEDESTRIAN ACCESSIBILITY SIDEWALKS. (SEE SITE PLAN FOR LOCATIONS).

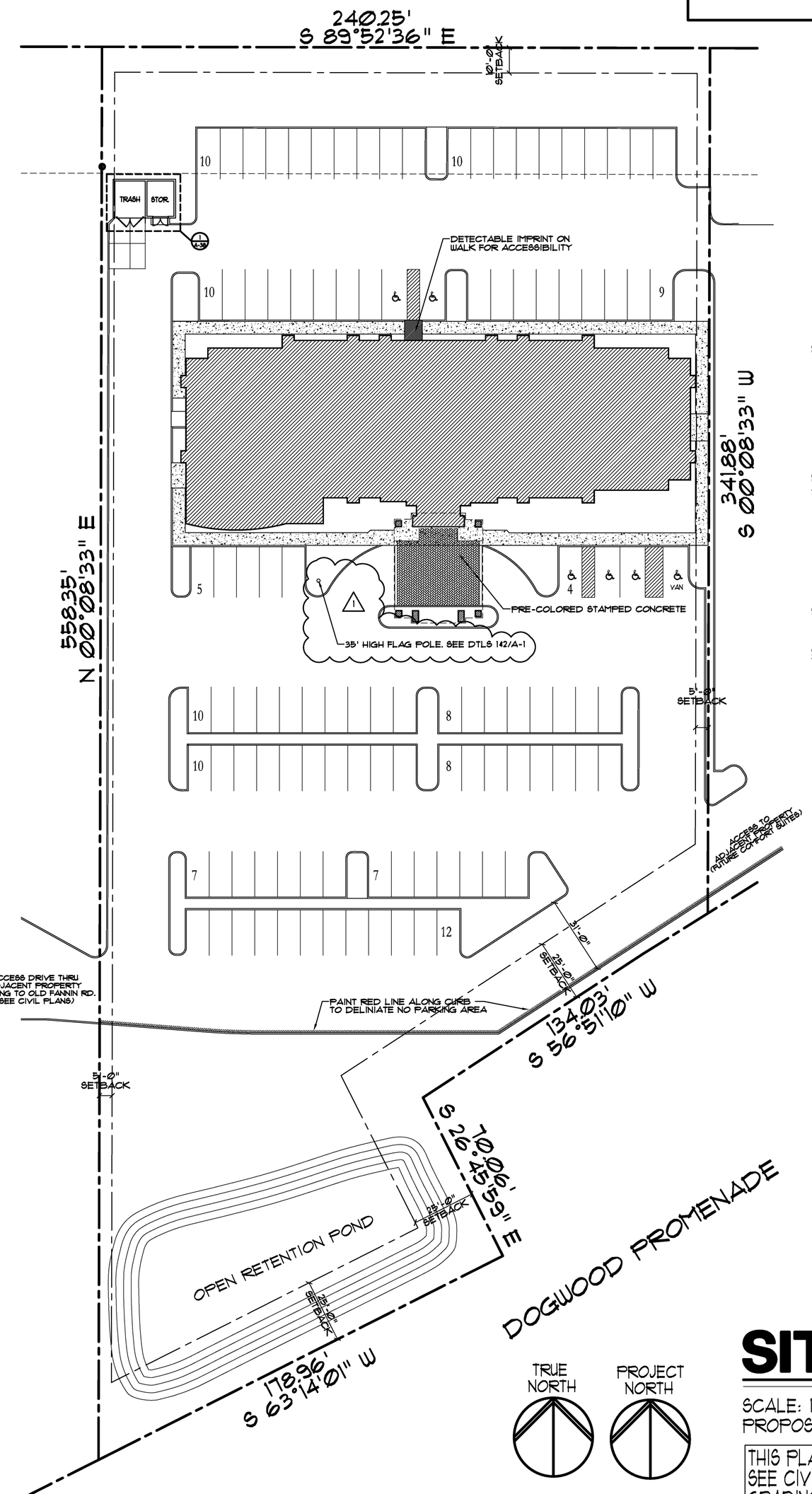

SITE PLAN

SCALE: 1"=30'
PROPOSED PARKING: 110 SPACES (INCLUDES 4 ACCESSIBLE)

THIS PLAN PROVIDED FOR GENERAL REFERENCE PURPOSES ONLY. SEE CIVIL PLANS BY BENCHMARK LLC. FOR SITE GEOMETRY, GRADING, DRAINAGE, UTILITIES, ETC.

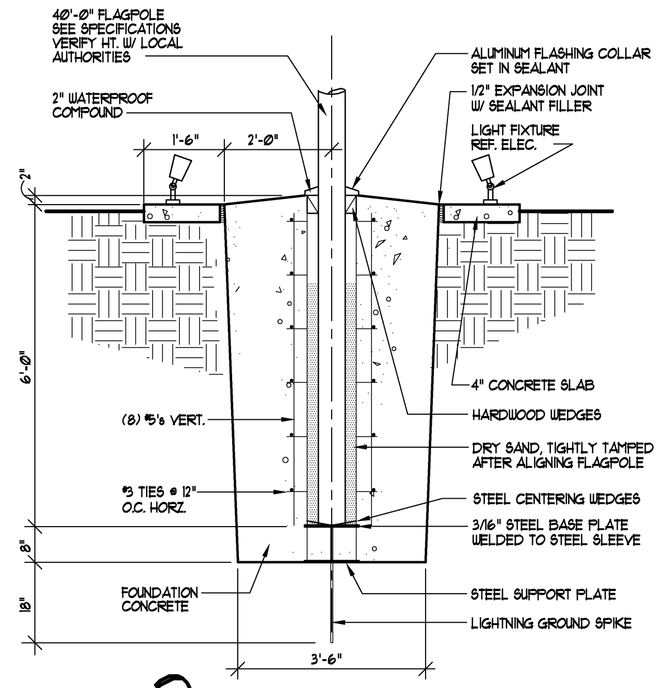

2 FLAGPOLE BASE
1/2" = 1'-0"

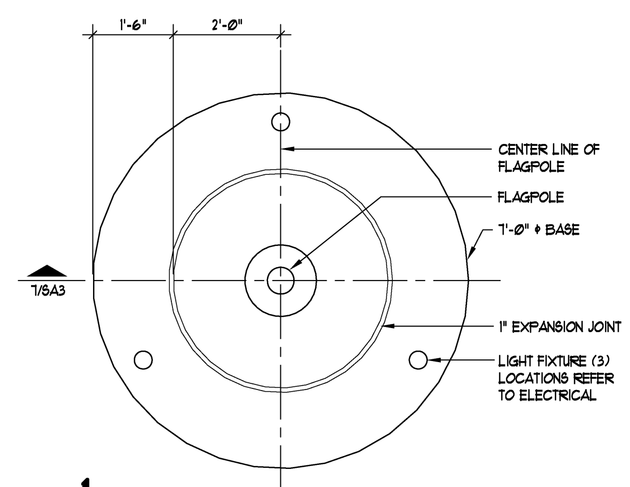

1 FLAGPOLE ISLAND
1/2" = 1'-0"

RICHARD F. STELDT
ARCHITECT
(262) 502-4500
N85 W16058 APPLETON AVE., MENOMONEE FALLS, WI 53051

Drawn: AAP/DDS
Approved:

date	comments
2	5-22-08 REVISED PER ADDENDUM #2
1	2-29-08 REVISED PER ADDENDUM #1

REVISIONS

Job: 2232-1107
Date: 12-07-07

Hampton Inn.
FLOWOOD, MS
98 UNITS

Sheet
A-1