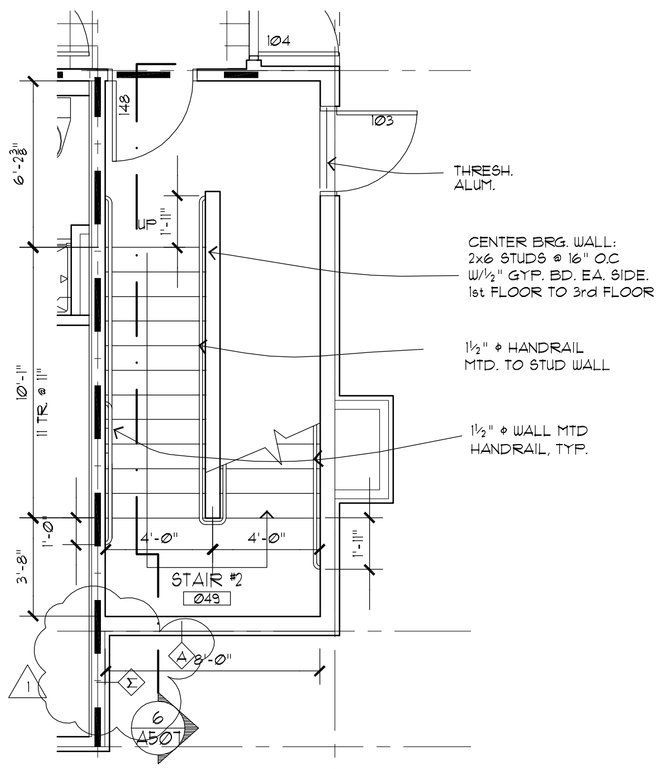

1 STAIR No. 2 - GROUND FLOOR

¼" = 1'-Ø" STAIR #1 OPPOSITE HAND AX-X-X

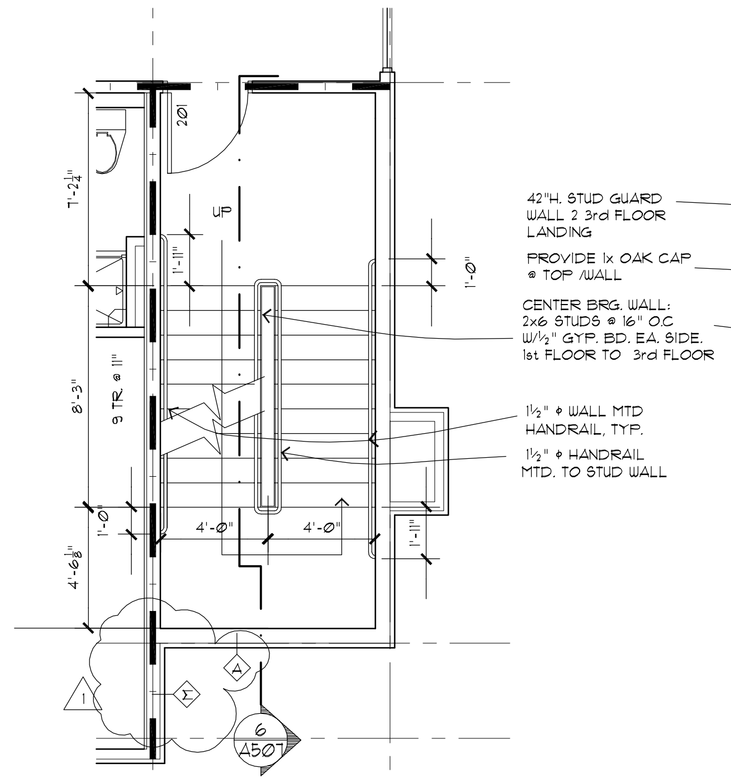

2 STAIR No. 2 -2nd FLOOR

¼" = 1'-Ø" STAIR #1 OPPOSITE HAND AX-X-X

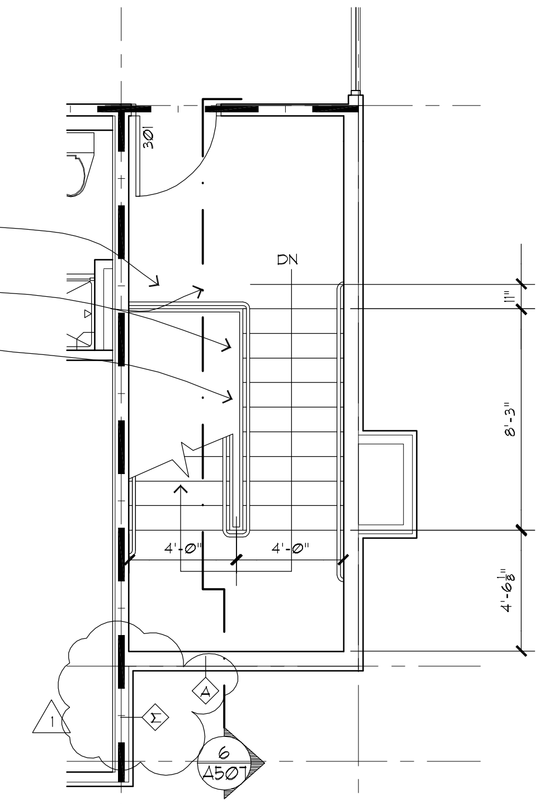

3 STAIR No. 2-3rd FLR

¼" = 1'-Ø" STAIR #1 OPPOSITE HAND AX-X-X

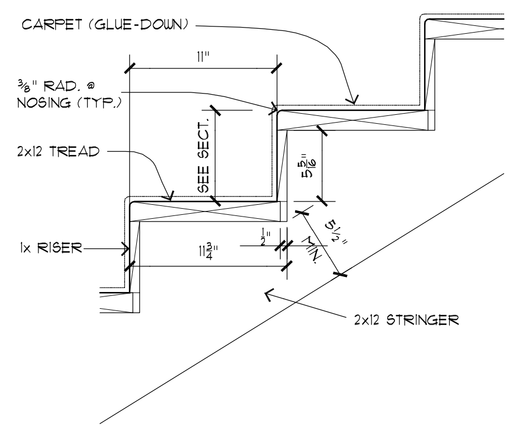

4 STAIR TREAD DET.

1½" = 1'-Ø" AX-X-X

STAIR NOTES

1. PROVIDE COMPLETE HANDRAIL/GUARDRAIL SYSTEM IN STAIR #1 & #2 IN CONFORMANCE WITH 2006 INTERNATIONAL BUILDING CODE.
2. STAIR HANDRAIL - 1½" DIA. ROUND PAINTED STEEL TUBE. HANDRAIL MOUNTED TO WALLS. AND TO GUARDRAIL POSTS.

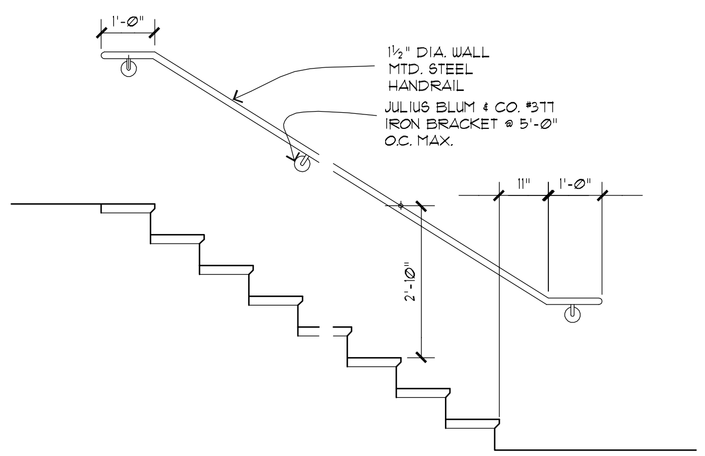

5 TYP. WALL MTD. RAIL DETAIL

½" = 1'-Ø" AX-X-X

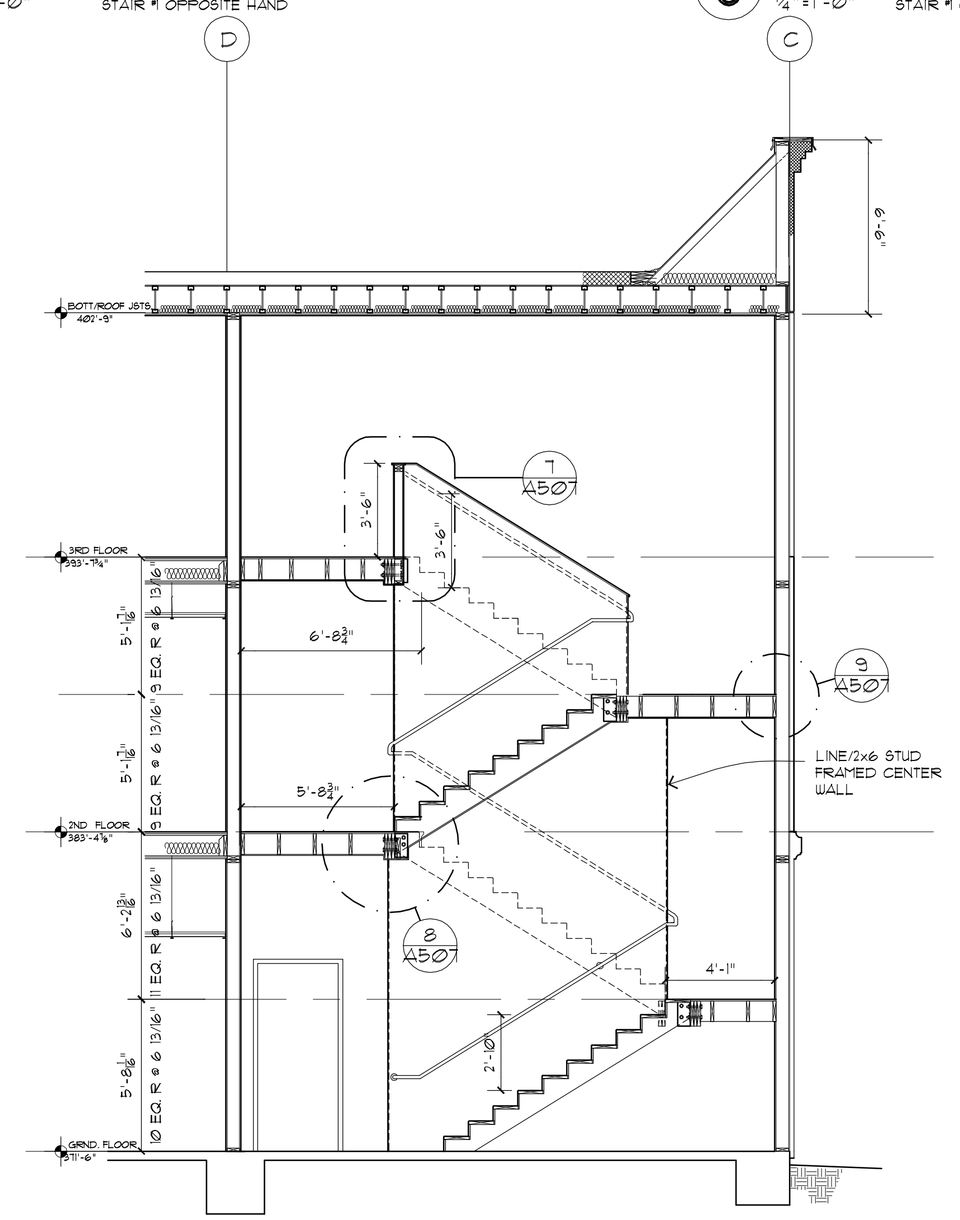

6 STAIR SECTION

¼" = 1'-Ø" AX-X-X

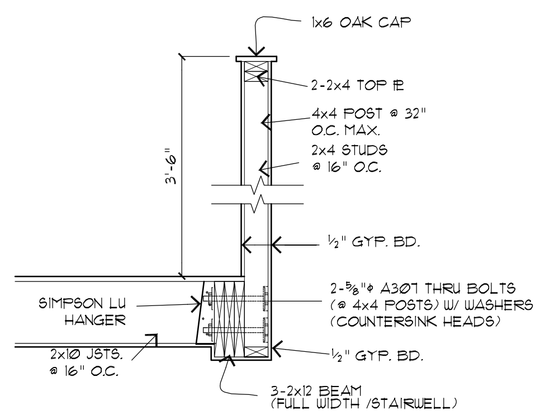

7 STAIR LANDING DET.

3/4 = 1'-Ø" AX-X-X

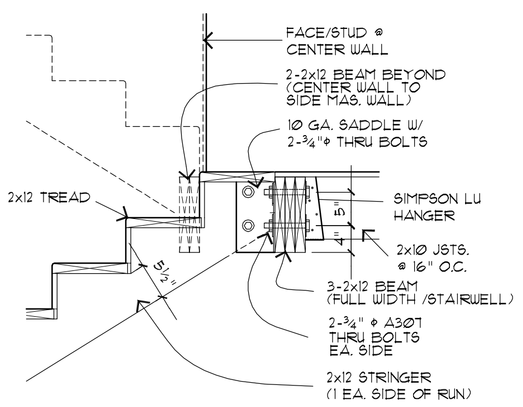

8 STAIR LANDING DET.

3/4 = 1'-Ø" AX-X-X

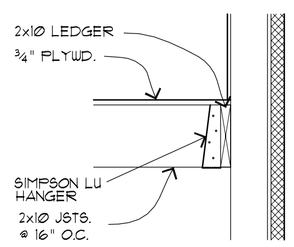

9 STAIR LANDING DET.

3/4 = 1'-Ø" AX-X-X

Richard Molenaar
ARCHITECT

1-31-2011
RICHARD MOLENAAR
NO. 8272
STATE OF LOUISIANA
REGISTERED ARCHITECT

PROJECT NAME:
Hampton Inn
Mane Street
West Monroe, Louisiana

SHEET TITLE:

PROJECT NO.	LATEST REVISION:
09017	1/26/11 (1)
DRAWN BY: CJ / CHECKED BY: RM	SHEET NUMBER: A507
DATE: 9/13/2010	