Door Schedule

Number	Door Width	Door Hght.	Door Trk.	Door Elev.	Door Mat'l	Door Fin.	Frame Elev.	Frame Mat'l	Frame Head Detail	Frame Jamb Detail	Frame Finish	Rating (Minutes)	Hardware Set	Remarks
101	PAIR 3'-0"	7'-0"		5	ALUM.	FACT.	-	ALUM	-	-	FACTORY		6	AUTO. ENTRANCE SLIDERS
102	PAIR 3'-0"	7'-0"		5	ALUM.	FACT.	-	ALUM	-	-	FACTORY		5	AUTO. ENTRANCE SLIDERS
103	3'-0"	7'-0"	1 3/4"	6	HM	PAINT	B	HM	3	2	PAINT		24	PROVIDE EXIT DEVICE
104	3'-0"	7'-0"	1 3/4"	4	ALUM.	FACT.	-	ALUM	-	-	FACTORY		7	PROVIDE EXIT DEVICE
105	3'-0"	7'-0"	1 3/4"	4	ALUM.	FACT.	-	ALUM	-	-	FACTORY		7	PROVIDE EXIT DEVICE
106	3'-0"	7'-0"	1 3/4"	6	HM	PAINT	B	HM	3	2	PAINT		15	
107	3'-0"	7'-0"	1 3/4"	6	HM	PAINT	B	HM	3	2	PAINT		15	
108	3'-0"	7'-0"	1 3/4"	4	ALUM.	FACT.	-	ALUM	-	-	FACTORY		7	PROVIDE EXIT DEVICE
109	3'-0"	7'-0"	1 3/4"	6	HM	PAINT	B	HM	3	2	PAINT		24	PROVIDE EXIT DEVICE
110	3'-0"	6'-8"	1 3/4"	3	WD SC	STAIN	A	HM	4	4	PAINT	1 HR.	25	
111	NOT USED													
112	3'-0"	7'-0"	1 3/4"	4	ALUM.	FACT.	-	ALUM	-	-	FACTORY		6	PROVIDE EXIT DEVICE
113	3'-0"	6'-8"	1 3/4"	9	STL/GL	FACT.	-	STEEL	4(SIM)	4(SIM)	FACTORY	20 MIN.	18	
114	4'-0"	6'-8"	1 3/4"	3	WD SC	STAIN	A	HM	4	4	PAINT	3/4 HR.	22	
115	3'-0"	6'-8"	1 3/4"	3	WD SC	STAIN	A	HM	9	8	PAINT		21	
116	3'-0"	6'-8"	1 3/4"	3	WD SC	STAIN	A	HM	3	2	PAINT		9	
117	3'-0"	6'-8"	1 3/4"	3	HM	STAIN	A	HM	9	8	PAINT		10	
118	3'-0"	6'-8"	1 3/4"	3	WD SC	STAIN	A	HM	9	8	PAINT		9	
119	3'-6"	6'-8"	1 3/4"	3	WD SC	STAIN	A	HM	9	8	PAINT	3/4 HR.	10	
120	3'-0"	6'-8"	1 3/4"	3A	WD SC	STAIN	A	HM	9	8	PAINT		26	½ PANEL GLASS, FIRE RATED
121	3'-0"	6'-8"	1 3/4"	3	WD SC	STAIN	A	HM	9	8	PAINT		13	
122	2'-6"	6'-8"	1 3/4"	3	WD SC	STAIN	A	HM	9	8	PAINT		10	
123	3'-0"	6'-8"	1 3/4"	3	WD SC	STAIN	A	HM	9	8	PAINT		10	
124	3'-0"	6'-8"	1 3/4"	3	WD SC	STAIN	A	HM	9	8	PAINT	20 MIN.	13	
125	2'-6"	6'-8"	1 3/4"	3	WD SC	STAIN	A	HM	9	8	PAINT		13	
126	3'-0"	6'-8"	1 3/4"	3	WD SC	STAIN	A	HM	4	4	PAINT	20 MIN.	11	
127	3'-0"	6'-8"	1 3/4"	3	WD SC	STAIN	A	HM	2	2	PAINT	20 MIN.	9	
128	3'-0"	6'-8"	1 3/4"	3	WD SC	STAIN	A	HM	9	8	PAINT		11	
129	3'-0"	6'-8"	1 3/4"	3	WD SC	STAIN	A	HM	9	8	PAINT		13	
130	3'-0"	6'-8"	1 3/4"	6	WD SC	STAIN	A	HM	9	8	PAINT	3/4 HR.	9	
131	3'-0"	7'-0"	1 3/4"	4	ALUM.	FACT.	-	ALUM	-	-	FACTORY		6	PROVIDE EXIT DEVICE
132	3'-0"	6'-8"	1 3/4"	3	WD SC	STAIN	A	HM	9	8	PAINT	20 MIN.	16	
133	3'-0"	6'-8"	1 3/4"	3	WD SC	STAIN	A	HM	9	8	PAINT	20 MIN.	16	
134	3'-0"	6'-8"	1 3/4"	3	WD SC	PAINT	A	HM	9	8	PAINT		10	
135	3'-0"	6'-8"	1 3/4"	3	WD SC	STAIN	A	HM	13	12	PAINT		10	
136	3'-0"	6'-8"	1 3/4"	3	WD SC	STAIN	A	HM	9	8	PAINT	3/4 HR.	9	
137	3'-0"	6'-8"	1 3/4"	3	WD SC	STAIN	A	HM	4	4	PAINT	3/4 HR.	16	
138	3'-0"	6'-8"	1 3/4"	3	WD SC	STAIN	A	HM	9	8	PAINT	20 MIN.	27	
139	3'-0"	6'-8"	1 3/4"	3	WD SC	STAIN	A	HM	9	8	PAINT	20 MIN.	27	
140	3'-0"	6'-8"	1 3/4"	3A	WD SC	STAIN	A	HM	4	4	PAINT	3/4 HR.	26	½ PANEL GL., 3/16" FIRE RATED(OR ¼" WIRE GL.)
141	3'-0"	6'-8"	1 3/4"	3	HM	PAINT	A	HM	13	12	PAINT	3/4 HR.	9	
142	3'-0"	6'-8"	1 3/4"	3	WD SC	STAIN	A	HM	9	8	PAINT		10	
143	3'-0"	6'-8"	1 3/4"	3	WD SC	STAIN	A	HM	9	8	PAINT		10	
144	3'-6"	6'-8"	1 3/4"	3	WD SC	STAIN	A	HM	5	5	PAINT	3/4 HR.	9	
145	3'-6"	6'-8"	1 3/4"	3	HM	PAINT	A	HM	9	8	PAINT		10	
146	3'-0"	6'-8"	1 3/4"	6	HM	PAINT	A	HM	9	8	PAINT		10	
147	3'-0"	7'-0"	1 3/4"	4	ALUM.	FACT.	-	ALUM	-	-	FACTORY		6	PROVIDE EXIT DEVICE
148	3'-0"	6'-8"	1 3/4"	3	WD SC	STAIN	A	HM	4	4	PAINT	1 HR.	25	
149	3'-0"	6'-8"	1 3/4"	3	WD SC	STAIN	A	HM	4	4	PAINT	3/4 HR.	9	
150	3'-0"	6'-8"	1 3/4"	6	HM	PAINT	A	HM	6	6	PAINT		9	
201 / 301	3'-0"	6'-8"	1 3/4"	3	WD SC	STAIN	A	HM	5	5	PAINT	1 HR.	25	
202 / 302	3'-0"	6'-8"	1 3/4"	3	WD SC	STAIN	A	HM	5	5	PAINT	3/4 HR.	19	
203 / 303	3'-0"	6'-8"	1 3/4"	3	WD SC	STAIN	A	HM	9	8	PAINT	3/4 HR.	19	
204 / 304	3'-0"	6'-8"	1 3/4"	3	WD SC	STAIN	A	HM	5	5	PAINT	3/4 HR.	19	
205 / 305	3'-0"	6'-8"	1 3/4"	3	WD SC	STAIN	A	HM	5	5	PAINT	1 HR.	25	
A	3'-0"	6'-8"	1 3/4"	1	WD SC	PRE-FIN	A	HM	4 (GR FLR) 5 (TYP. FLRS.)	4 (GR FLR) 5 (TYP. FLRS.)	PAINT	20 MIN.	1	ELECTRONIC LOCKSET
B	3'-0"	6'-8"	1 3/4"	3	WD SC	PRE-FIN	A	HM	9	8	PAINT		2	
C	2'-8"	6'-8"	1 3/8"	8	-	MIRRORED			-	-			6	MIRRORED SWING DOOR SURF. MTD. ON GYP. BD. CASED OPENG
D	3'-0"	6'-8"	1¾"	3	WD SC	PRE-FIN	A	HM	7	6	PAINT	20 MIN.	4	
E	3'-0"	6'-8"	1¾"	7	-	MIRRORED		HM	-	-			6	MIRRORED BI-PASS DOOR IN GYP. BD. CASED OPENG

NOTE: DOORS WITH RATING TO HAVE CLOSERS, EXCEPT DOOR "D"

HARDWARE SCHEDULE

SET # 1
1.5 PR HINGES
1 EA. CARD READER
1 EA.DOOR GUARD
1 EA.ONE WAY VIEWER
1 EA.CUSH N SEAL 3/0 X 7/0
1 EA. DOOR CLOSERS
1 EA.THRESHOLD
1 EA.WALL STOP

SET # 2
1.5 PR HINGES
1 EA. PRIVACY SET
1 EA. WALL STOP

SET # 3
MIRROR DOORS
ALL HARDWARE BY DOOR SUPPLIER

SET # 4
1.5 PR HINGES
1 EA. DOOR CLOSERS
2 EA. CONNECTING LATCHES
2 EA. DEADBOLTS
2 EA. DOOR GASKETING
2 EA. DOOR GUARDS
2 EA. WALL STOPS
2 EA. DOOR SWEEPS

SET # 5
1 EA. REMOTE CARD READER
1 EA. INTERCOM @ VESTIBULE DOOR
BALANCE OF HARDWARE BY DOOR SUPPLIER

SET # 6
ALL HARDWARE BY DOOR SUPPLIER

SET # 7
1 EA. REMOTE CARD READERS
BALANCE OF HARDWARE BY DOOR SUPPIER

SET # 8
3 EA. HINGES
1 EA. PASSAGE CARD READER
1 EA. DOOR CLOSER
1 EA. KICK PLATE
1 EA. WALL STOP

SET # 9
3 EA. HINGES
1 EA. LOCKSET
1 EA. DOOR CLOSER
1 DOOR STOP
1 EA. KICK PLATE (DOORS 114 & 116)

SET # 10
3 EA. HINGES
1 EA. LOCKSET
1 EA. WALL STOP

SET # 11
3 EA. HINGES
1 EA. KEY PAD LOCK
1 EA. DOOR CLOSER
1 EA. PEEPHOLE
1 EA. WALL STOP

SET # 12
3 HINGES
1 EA. PRIVACY SET
1 EA. KICK PLATE
1 EA. DOOR CLOSER
1 EA DOOR STOP

SET # 13
3 EA. HINGES
1 EA. OFFICE LOCK
1 EA. WALL STOP

SET # 14
6 EA. HINGES
1 EA. LOCKSET
1 EA. DUMMY LEVER
2 EA. FLUSH BOLTS
2 EA. WALL STOPS

SET # 15
3 EA. HINGES
1 EA. LOCK
1 EA. DOOR CLOSER
2 EA. THRESHOLD
1 EA. SOUND SEAL
1 EA. RAIN DRIP CAP

SET # 16
3 EA. HINGES
1 EA. LOCKSET
1 EA. DOOR CLOSER
1 EA. DOOR GASKETING
1 EA. KICK PLATE
1 EA. WALL STOP
1 EA. CYLINDER

SET # 17
6 EA. HINGES
2 EA. LOCKSET
2 EA. FLUSH BOLT
2 EA. WALL STOP

SET # 18
3 EA. HINGES
1 EA. CARD READER
1 EA. DOOR CLOSERS
1 EA. PERIMETER GASKET
1 EA. WALL STOP

SET # 19
3 EA. HINGES
1 EA. LOCKSET
1 EA. DOOR CLOSER
1 EA. PERIMETER GASKET
1 EA. KICK PLATE
1 EA. WALL STOP

SET # 20
4 EA. HINGES
1 EA. STOREROOM LOCK
1 EA. DOOR CLOSERS
2 EA. ARMOR PLATES
1 EA. PERIMETER GASKET
1 EA. DOOR STOP

SET # 21
3 EA. HINGES
1 EA. PRIVACY SET
1 EA. DOOR STOP

SET # 22
3 EA. HINGES
1 EA. LOCKSET
1 EA. DOOR CLOSER
1 EA. DOOR GASKETING
1 EA. KICK PLATE
1 EA WALL STOP

SET # 23
3 EA. HINGES
1 EA. LOCKSET
1 EA. DOOR CLOSER
1 EA. PERIMETER GASKET
1 EA. THRESHOLD
1 EA. DOOR SWEEP

SET # 24
3 EA. HINGES
1 EA. EXIT DEVICE
1 EA. DOOR CLOSER
1 EA. THRESHOLD
1 EA. DOOR SWEEP
1 EA. WEATHERSTRIPPING
1 EA. RAIN DRIP CAP
1 EA. FLOOR STOP
1 EA. KICK PLATE

SET # 25
3 EA. HINGES
1 EA. EXIT DEVICE
1 EA. DOOR CLOSER
1 EA. KICK PLATE
1 EA. PERIMETER GASKET
1 EA. WALL STOP

SET # 26
1.5 PR HINGES
1 EA. CARD READER
1 EA. DOOR CLOSER
1 EA. PERIMETER GASKET
1 EA. WALL STOP

SET # 27
3 HINGES
1 EA. LATCHSET
1 EA. KICK PLATE
1 EA. DOOR CLOSER
1 EA WALL STOP

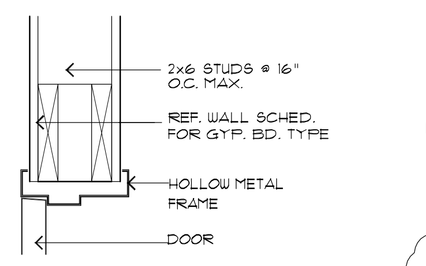

13 DOOR HEAD
1½" = 1'-0" AX-X-X

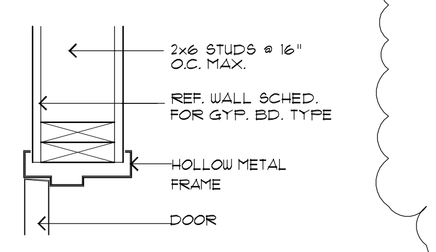

12 DOOR JAMB
1½" = 1'-0" AX-X-X

11 NOT USED
1½" = 1'-0" AX-X-X

10 NOT USED
1½" = 1'-0" AX-X-X

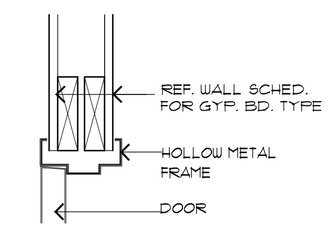

9 DOOR HEAD
1½" = 1'-0" AX-X-X

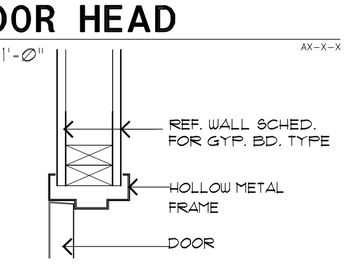

8 DOOR JAMB
1½" = 1'-0" AX-X-X

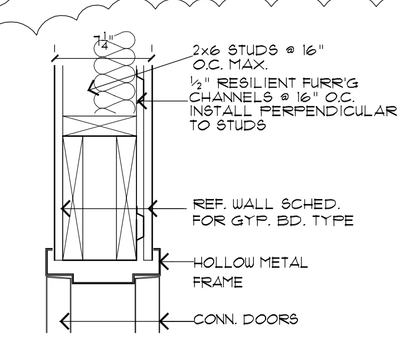

7 DOOR HEAD
1½" = 1'-0" AX-X-X

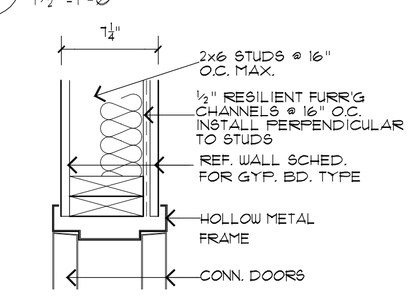

6 DOOR JAMB
1½" = 1'-0" AX-X-X

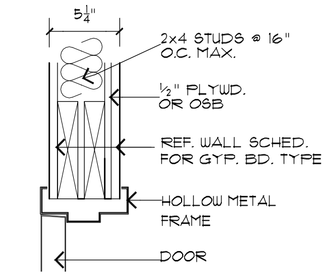

5 DOOR HEAD (jmb. sim.)
1½" = 1'-0" AX-X-X

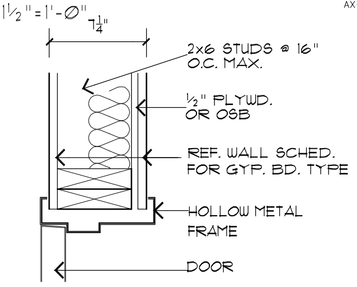

4 DOOR JAMB (hd. sim.)
1½" = 1'-0" AX-X-X

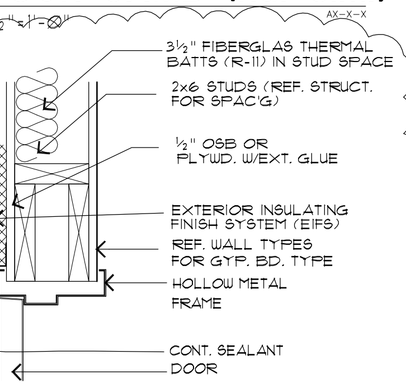

3 DOOR HEAD
1½" = 1'-0" AX-X-X

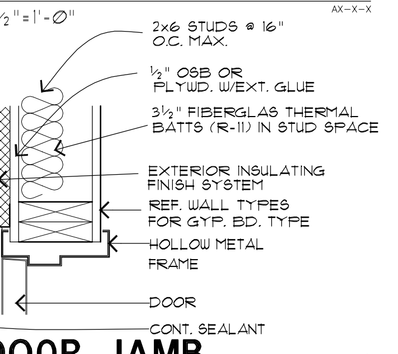

2 DOOR JAMB
1½" = 1'-0" AX-X-X

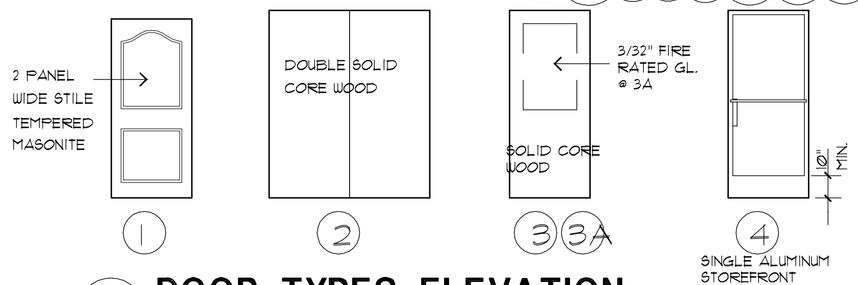

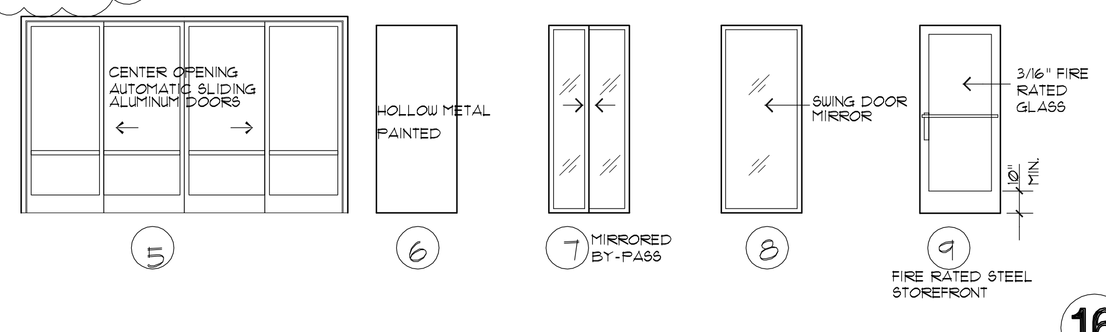

1 DOOR TYPES ELEVATION
¼" = 1'-0" AX-X-X

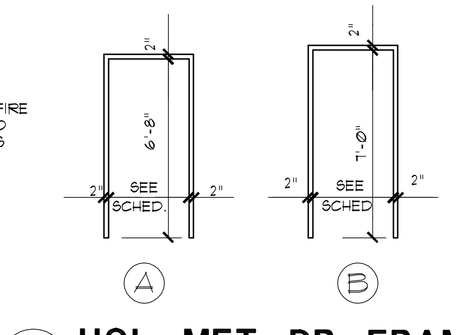

16 HOL. MET. DR. FRAME
¼" = 1'-0" AX-X-X

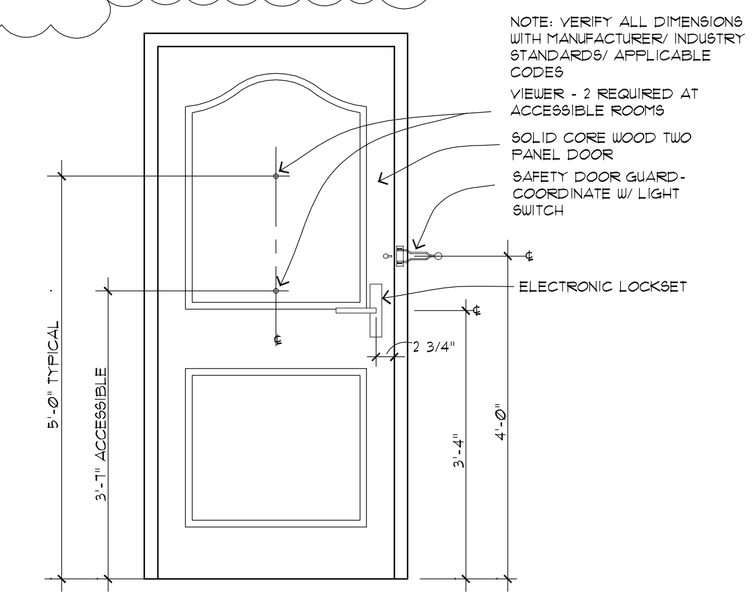

17 DOOR "A" DETAIL
¾" = 1'-0" AX-X-X

Richard Molenaar
ARCHITECT

DOOR NOTES:
1. PROVIDE COMPLETE ELECTRONIC CARD CARD OPERATED LOCKSET SYSTEM AS MARKED. SYSTEM TO INCLUDE FRONT DESK UNIT, 1,000 EA. CARD KEYS, BACK UP CARD KEY KIT AND TWO (2) SPARE CARD LOCKS.
2. EXTERIOR HOLLOW METAL DOORS TO OR FROM CONDITIONED SPACES TO BE INSULATED.
3. DOOR HARDWARE SHALL CONFORM TO ADA & GOVERNING HANDICAP CODE. ALL HOL. METAL & WOOD DOORS TO HAVE LEVER SETS.
4. COORDINATE WITH MECHANICAL DRAWINGS FOR DOORS REQUIRING GRILLES.
5. DOORS WITH RATING TO HAVE CLOSERS, EXCEPT DOOR "D"
6. GLAZING IN NON-RATED DOORS, STORM DOORS, WITHIN 24 INCHES OF DOORS, WITHIN 18 INCHES ABOVE FINISHED FLOOR, AND EXCEEDING 9 SQUARE FEET WITHIN 36 INCHES OF WALKING SURFACE MUST BE SAFETY GLAZED, TEMPERED, AND PASS THE TEST REQUIREMENTS OF CPSC 16-CFR, PART 1201 AND COMPLY WITH ANSI Z97.1. [IBC 2406.1, 2, AND 2406.3, (6) & (7)]
7. FIRE-RESISTANT RATED DOORS MUST HAVE FIRE RATED FRAMES, HARDWARE, CLOSERS, AND OTHER RATED ACCESSORIES.
8. ALUMINUM DOORS AND ENTRANCES WITH GREATER THAN 50% GLAZING, TINTED, SHALL BE LABELED AND CERTIFIED BY THE MANUFACTURER FOR SHGC Ø.51"

1-31-2011
RICHARD MOLENAAR
NO. 8323
STATE OF LOUISIANA
REGISTERED ARCHITECT

PROJECT NAME:
Hampton Inn
Mane Street
West Monroe, Louisiana

SHEET TITLE:
Door Schedule/ Door Details

PROJECT NO.	LATEST REVISION:
09017	1/26/11 (1)
DRAWN BY: CJ / CHECKED BY: RM	SHEET NUMBER:
DATE: 9/13/10	A610