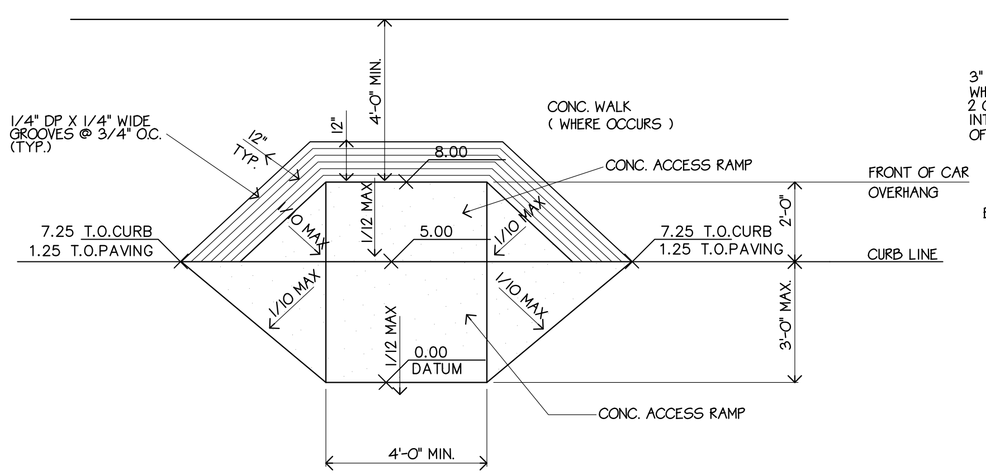

NOTE:
ALL ELEVATIONS ARE IN INCHES ABOVE DATUM

15 HANDICAP ACCESS CURB RAMP
SCALE: 3/8"=1'-0"

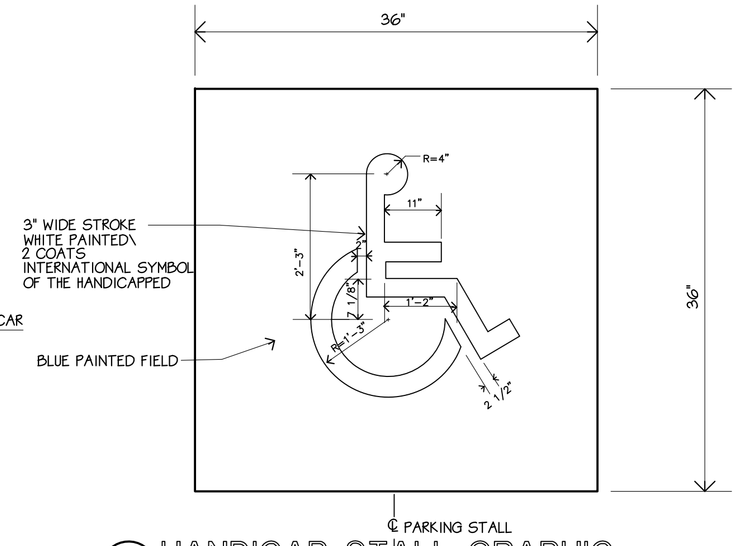

11 HANDICAP STALL GRAPHIC
NO SCALE

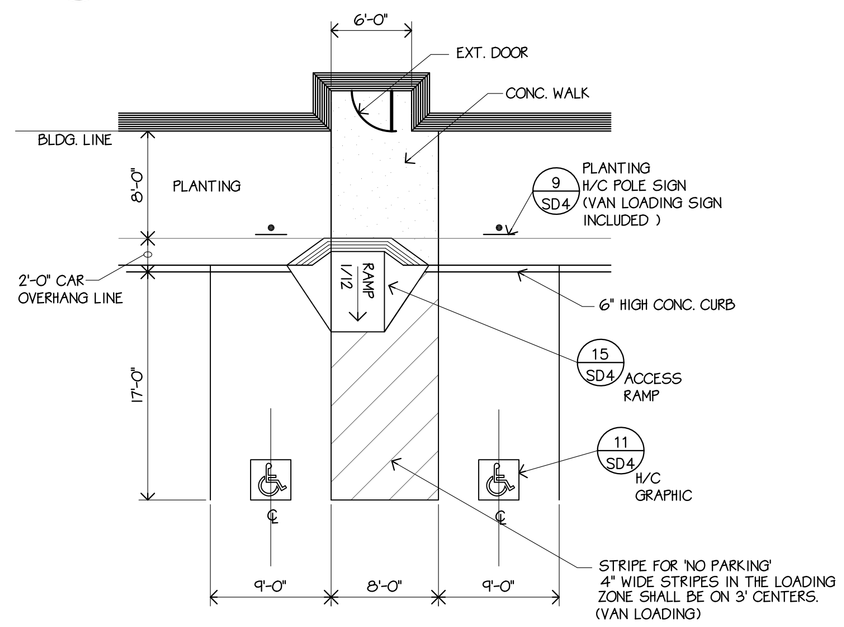

12 HDCP PARKING STALL LAYOUT
SCALE: 1/8"=1'

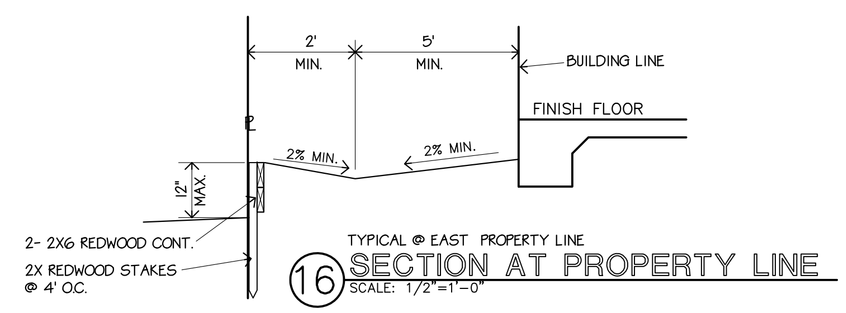

TYPICAL @ EAST PROPERTY LINE

16 SECTION AT PROPERTY LINE
SCALE: 1/2"=1'-0"

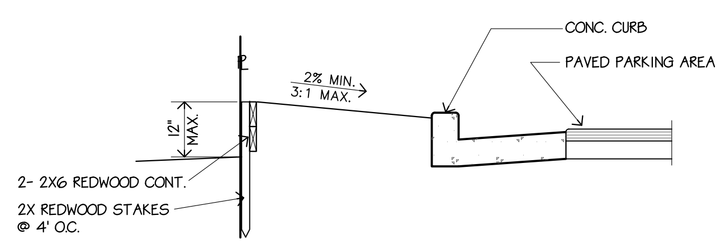

17 SECTION AT PROPERTY LINE
SCALE: 1/2"=1'-0"

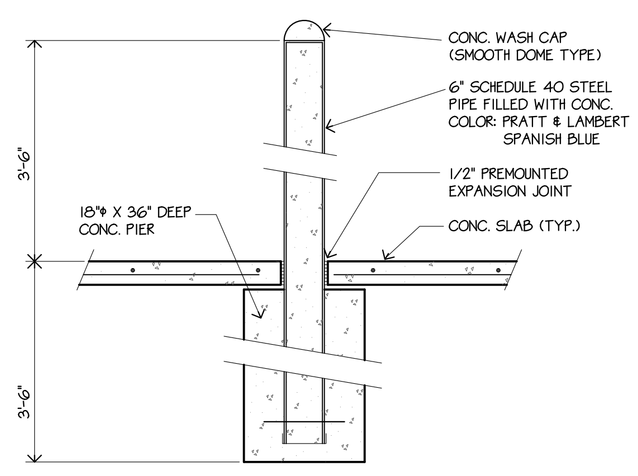

13 BOLLARD DETAIL
SCALE: 3/4"=1'-0"

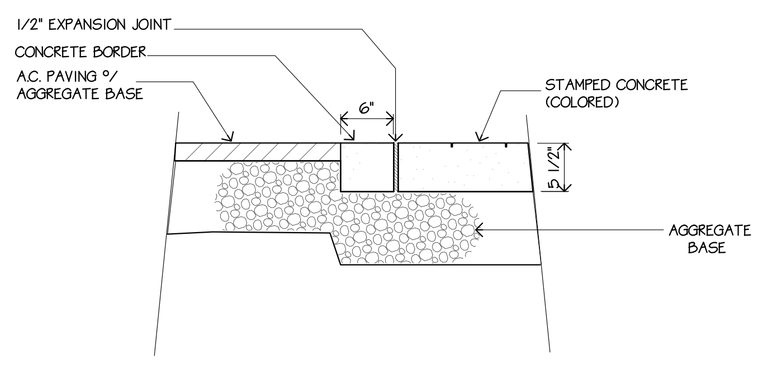

18 AGGREGATE BASE
SCALE: 1" = 1'-0"

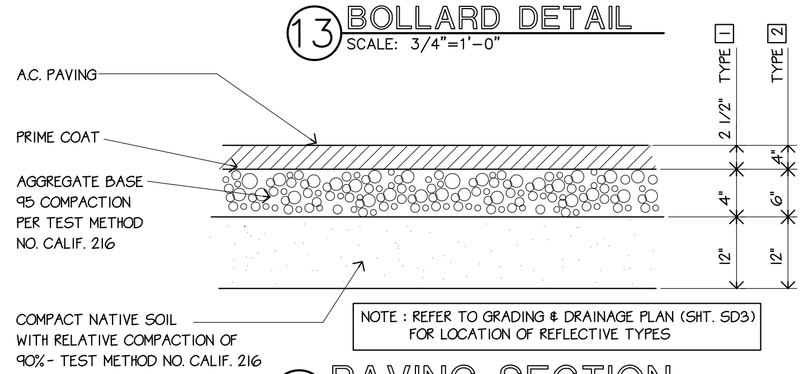

NOTE : REFER TO GRADING & DRAINAGE PLAN (SHT. SD3) FOR LOCATION OF REFLECTIVE TYPES

14 PAVING SECTION
NO SCALE

7 NOT USED
SCALE:

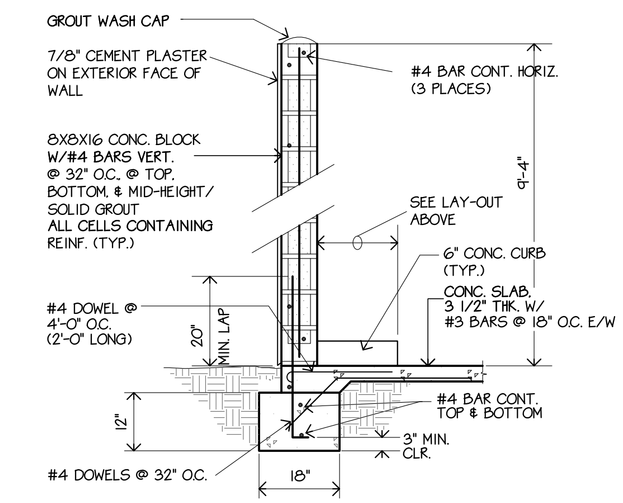

8 TRASH ENCLOSURE WALL SECTION
SCALE: 1/2"=1'-0"

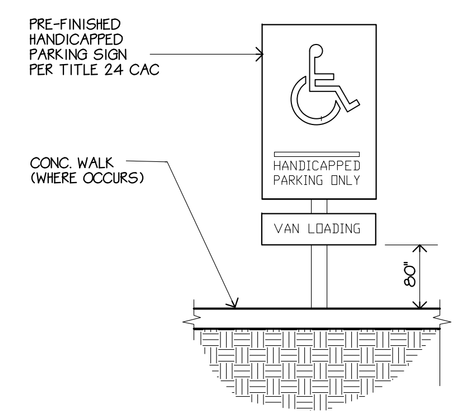

9 HANDICAP POLE SIGN
NO SCALE

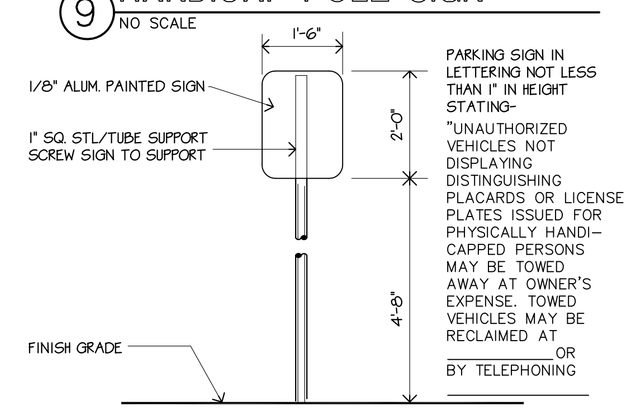

10 HANDICAP SIGN AT ENTRANCE TO PARKING LOT
SCALE: 1/2"=1'-0"

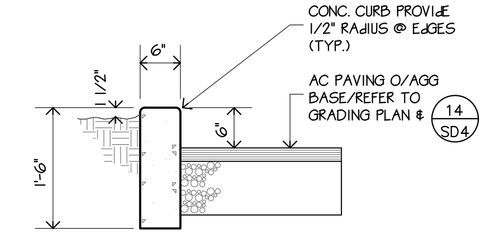

1 CONC. CURB DETAIL
SCALE: 3/4"=1'-0"

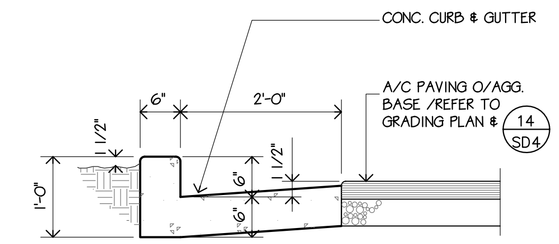

2 CONC. CURB GUTTER DETAIL
SCALE: 3/4"=1'-0"

3 NOT USED
SCALE:

4 NOT USED
SCALE:

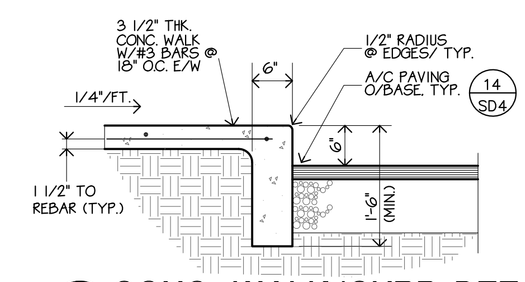

5 CONC. WALK/CURB DETAIL
SCALE: 3/4"=1'-0"

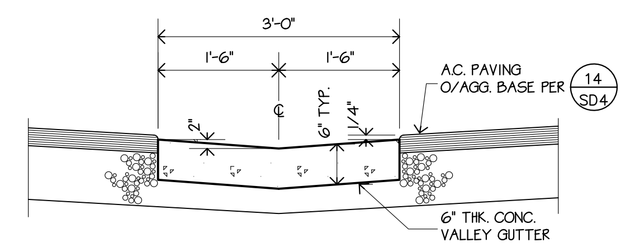

6 VALLEY GUTTER DETAIL
SCALE: 3/4"=1'-0"

SFO-SD4.DWG
09/29/97

LICENSED ARCHITECT
LEE GAGE
C-6718
REN. 1-31-99
STATE OF CALIFORNIA

LEE GAGE C-6718

lee gage & associates
architects engineers planners
7636 n. ingram suite 107 fresno, california 93711 phone (209) 439-2222

THESE DRAWINGS, DESIGNS, SKETCHES, IDEAS & ARRANGEMENTS ARE THE SOLE & EXCLUSIVE PROPERTY OF LEE GAGE & ASSOCIATES. ARCHITECT'S EXCLUSIVE USE ON AND IN CONJUNCTION WITH THE PROJECT FOR WHICH THEY WERE PREPARED. OR REPRESENTED IN THESE DOCUMENTS SHALL BE USED BY OR DISCLOSED TO ANY PERSON, FIRM OR CORPORATION FOR ANY PURPOSE WHATSOEVER WITHOUT WRITTEN CONSENT OF LEE GAGE & ASSOCIATES.

PROPOSED:
HAMPTON INN
CORPORATE DRIVE.
SOUTH SAN FRANSICO, CA.

by	date
drawn	
checked	
revised	
revised	
project no.	

SD4

sheet SET NO.