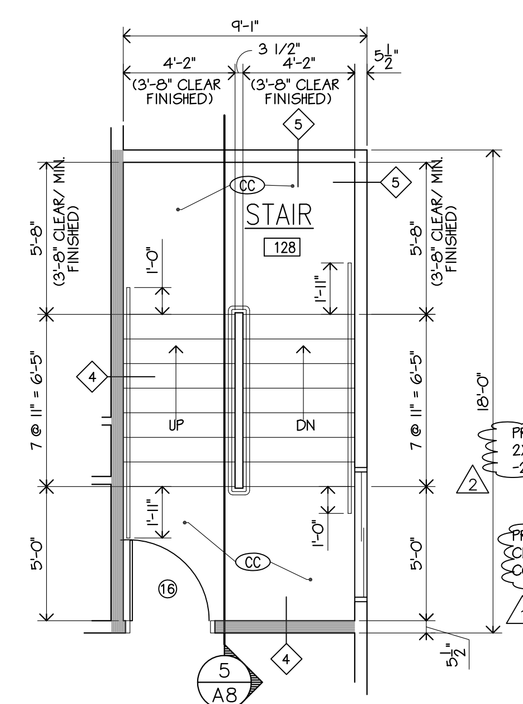

3 A8 STAIR @ 3rd FLOOR
SCALE = 1/4" = 1'-0"

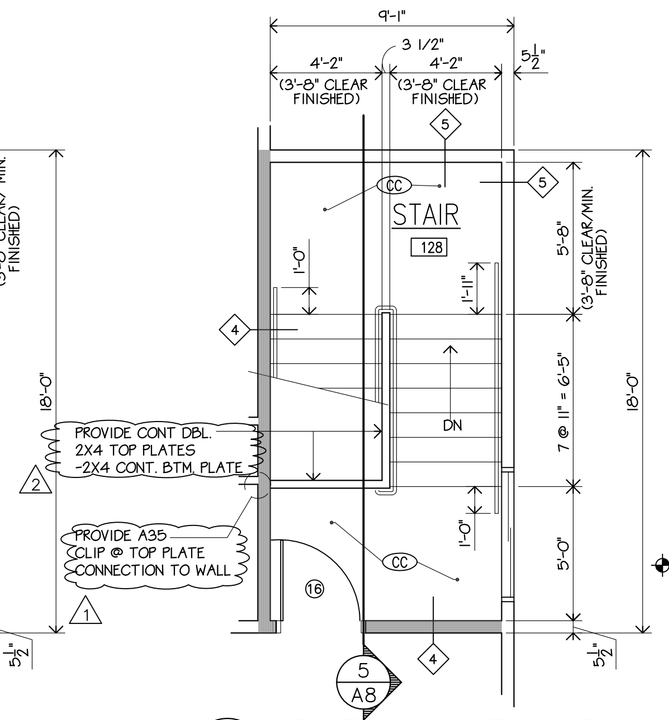

4a A8 STAIR @ 4th FLOOR
SCALE = 1/4" = 1'-0"

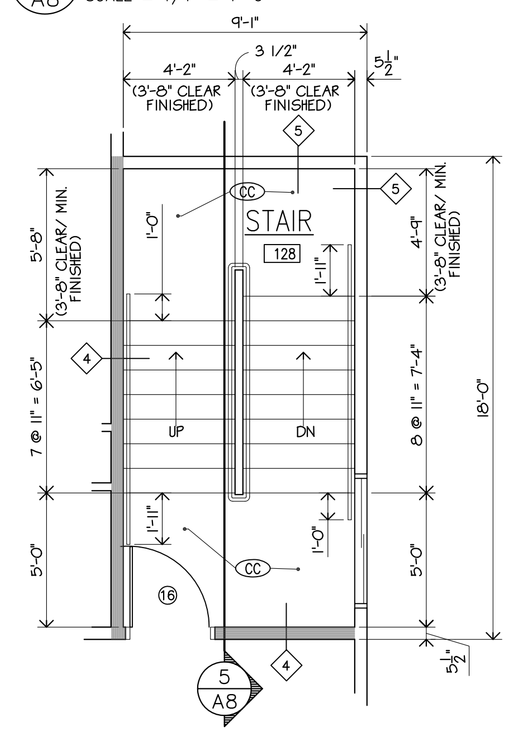

2 A8 STAIR @ 2nd FLOOR
SCALE = 1/4" = 1'-0"

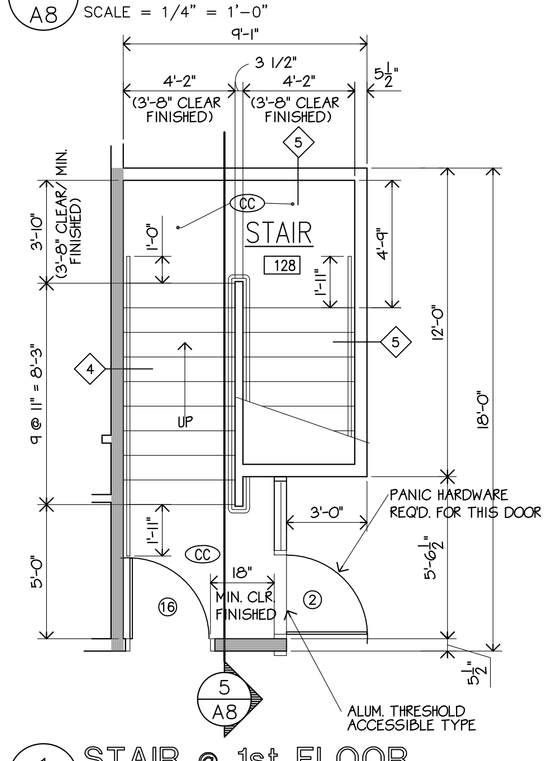

1 A8 STAIR @ 1st FLOOR
SCALE = 1/4" = 1'-0"

NOTE: ALL FLOOR LEVELS MUST BE CLEARLY NUMBERED AT EACH LANDING AT STAIRWAYS/ 6" HIGH LETTERS- REFLECTIVE

STAIRWAY REQUIREMENTS

STAIRWAY IDENTIFICATION SIGNS SHALL BE LOCATED AT EACH FLOOR LEVEL

1. SIGN SHALL STATE THE FLOOR LEVEL, THE UPPER & LOWER TERMINUS OF THE STAIRWAY AND WHETHER OR NOT THERE IS ROOF ACCESS.
2. SIGNS SHALL BE LOCATED APPROXIMATELY 5 FT. ABOVE THE FLOOR LANDING & READILY VISIBLE WHEN THE DOOR IS IN THE OPEN OR CLOSED POSITION
3. SIGNS SHALL COMPLY WITH UBC STANDARD 10-2.

STAIRWAYS EXITING DIRECTLY TO EXTERIOR (4 OR MORE STORIES) SHALL BE PROVIDED WITH MEANS FOR EMERGENCY ENTRY FOR FIRE DEPARTMENT ACCESS.

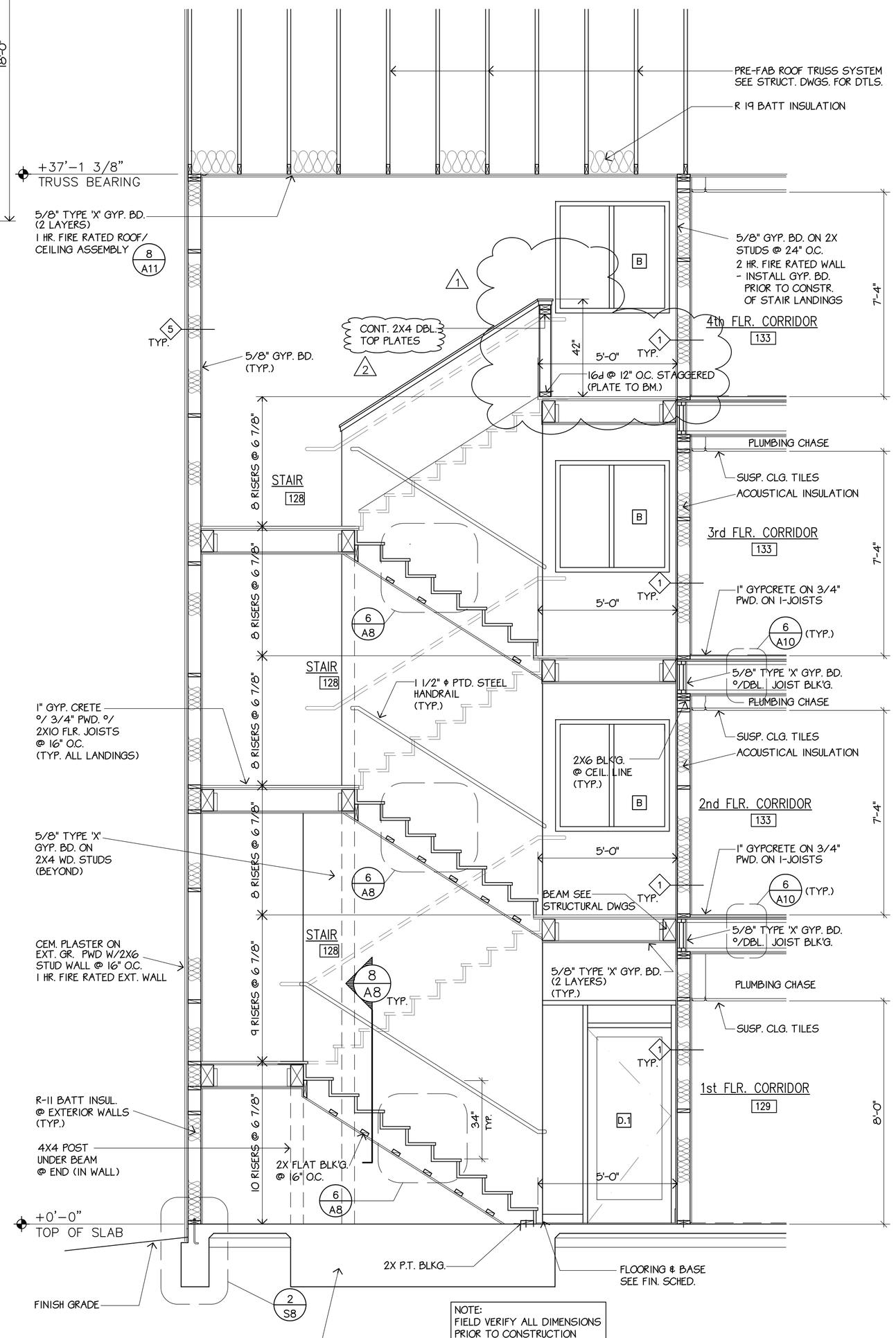

NOTE: FIELD VERIFY ALL DIMENSIONS PRIOR TO CONSTRUCTION

5 A8 STAIR SECTION
SCALE = 3/8" = 1'-0"

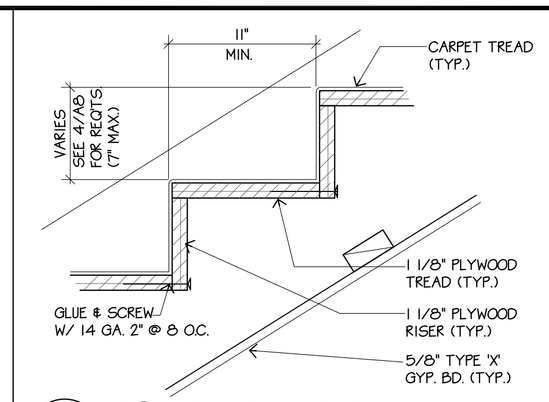

6 A8 RISER/TREAD DETAIL
SCALE = 1 1/2" = 1'-0"

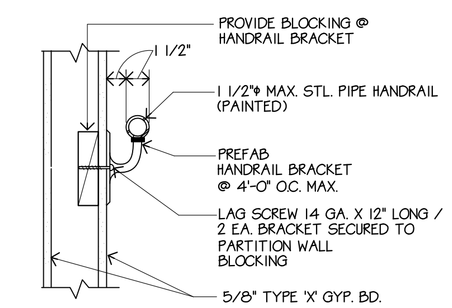

7 A8 HANDRAIL DETAIL
SCALE = 1 1/2" = 1'-0"

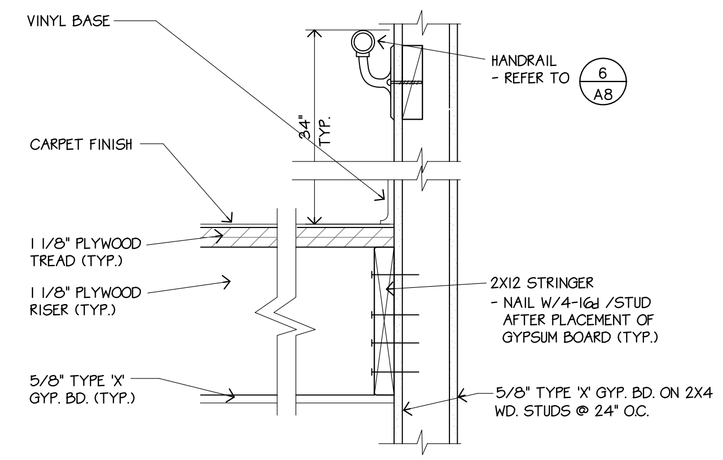

8 A8 STAIR HANDRAIL & POST DETAIL
SCALE = 1 1/2" = 1'-0"

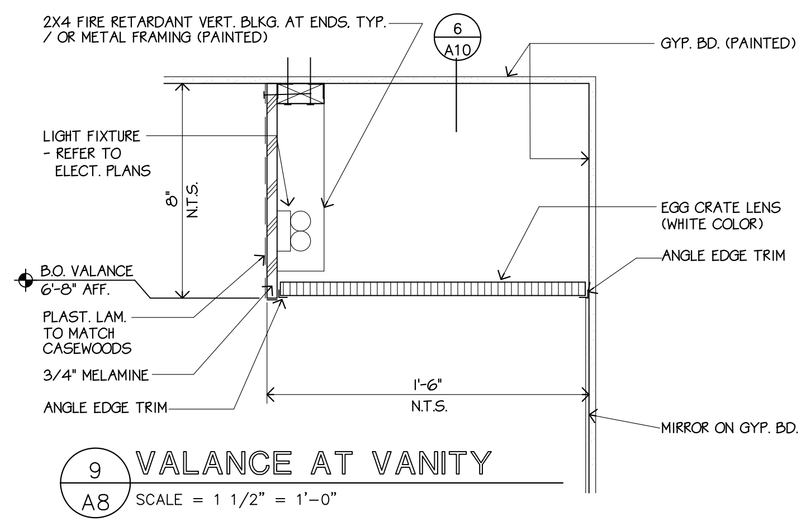

9 A8 VALANCE AT VANITY
SCALE = 1 1/2" = 1'-0"

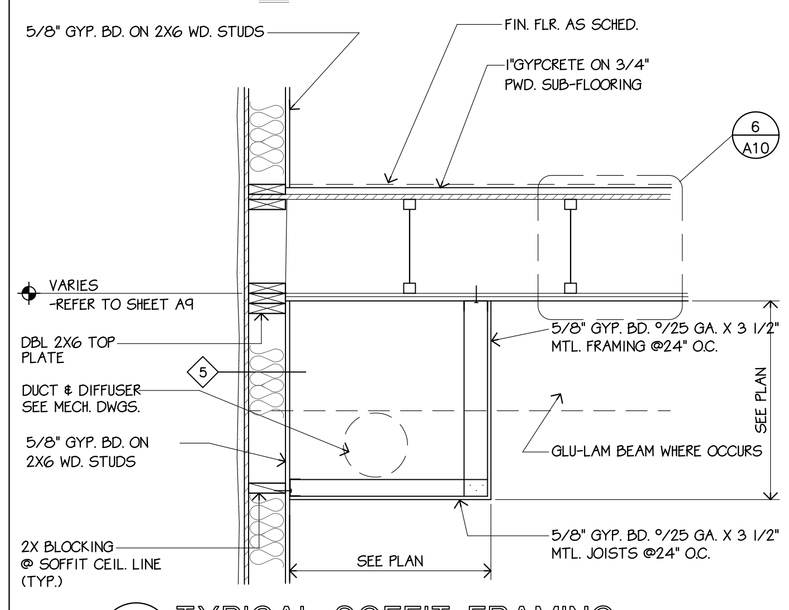

10 A8 TYPICAL SOFFIT FRAMING
SCALE = 3/4" = 1'-0"

2 REVISIONS PER CITY OF SOUTH SAN FRANCISCO 3/11/98

1 REVISIONS PER CITY OF SOUTH SAN FRANCISCO 2/5/98

LICENSED ARCHITECT
LEE GAGE
C-6718
REN. 1-31-99
STATE OF CALIFORNIA

LEE GAGE C-6718

© LEE GAGE & ASSOC.

lee gage & associates
architects • engineers • planners
7636 n. ingram suite 107 fresno, california 93711 phone (209) 439-2222

THESE DRAWINGS, DESIGNS, SKETCHES, SPECIFICATIONS, AND PLANS ARE THE EXCLUSIVE PROPERTY OF LEE GAGE & ASSOCIATES, AND WERE CREATED AND DEVELOPED BY AND FOR THE ARCHITECTS WHO ARE EXPRESSLY RETAINED IN CONNECTION WITH THE ARCHITECT'S WORK. NOTHING CONTAINED HEREIN SHALL BE DEEMED TO GRANT LICENSE, EXPRESS OR IMPLIED, BY REPRESENTED ON THESE DOCUMENTS SHALL BE REPRODUCED, PUBLISHED OR DISCLOSED TO ANY PERSON OR CORPORATION FOR ANY PURPOSE WITHOUT EXPRESSED WRITTEN CONSENT OF LEE GAGE & ASSOCIATES.

PROPOSED:
HAMPTON INN
CORPORATE DRIVE
SOUTH SAN FRANCISCO, CA.

by	date
drawn	
checked	
revised	
revised	
project no.	

A8
sheet SET NO.