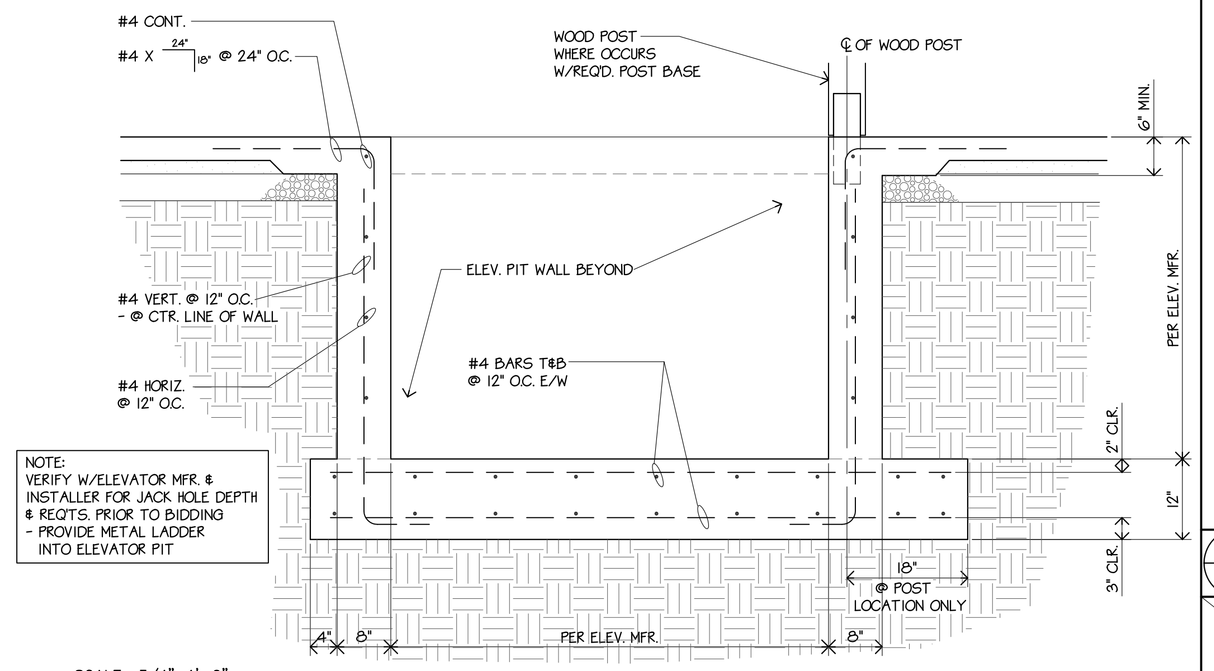

NOTE:
VERIFY W/ELEVATOR MFR. & INSTALLER FOR JACK HOLE DEPTH & REQ'TS. PRIOR TO BIDDING
- PROVIDE METAL LADDER INTO ELEVATOR PIT

SCALE: 3/4"=1'-0"

7/S8 **DETAIL - ELEVATOR PIT**

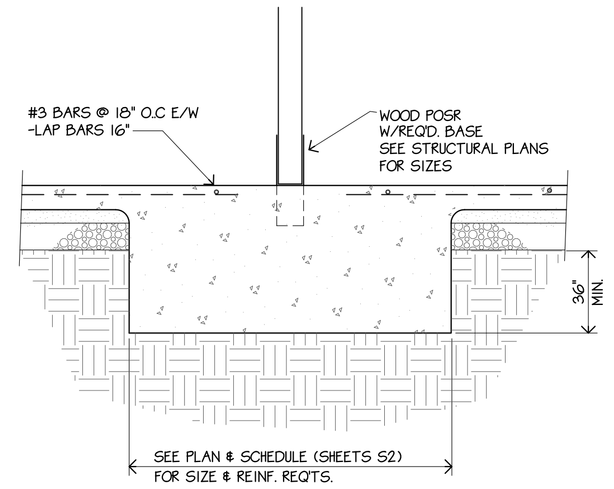

SCALE: 3/4"=1'-0"

4/S8 **DETAIL**

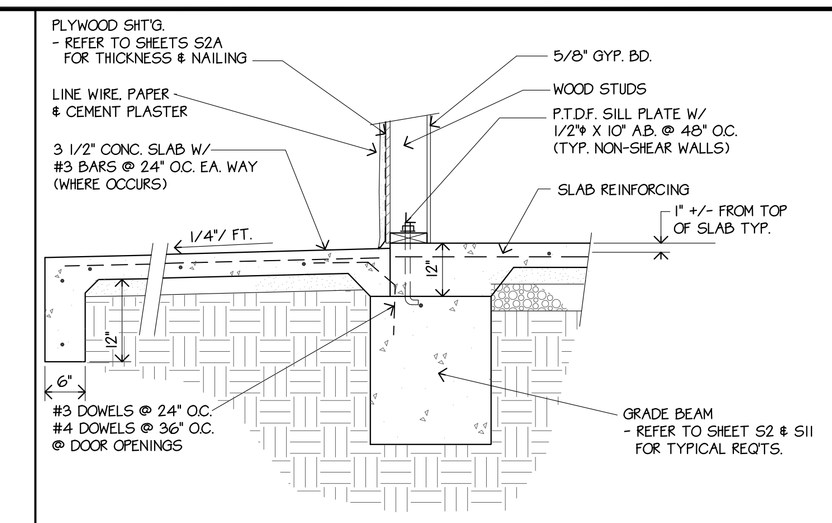

SCALE: 3/4"=1'-0"

1/S8 **DETAIL** TYPICAL EXTERIOR WALL @ WALK

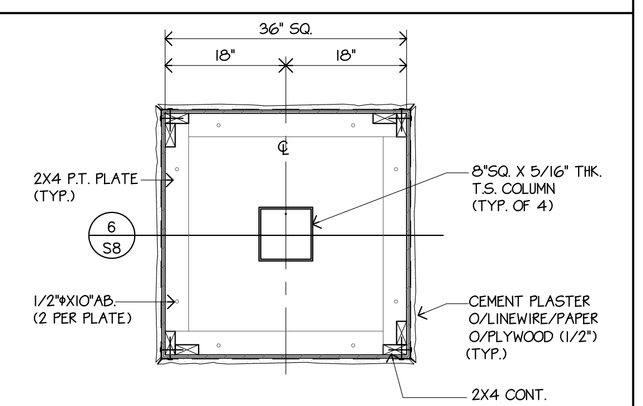

SCALE: 3/4"=1'-0"

8/S8 **DETAIL** TYPICAL COLUMN @ PORTE COCHERE

NOT USED

5/S8 **DETAIL**

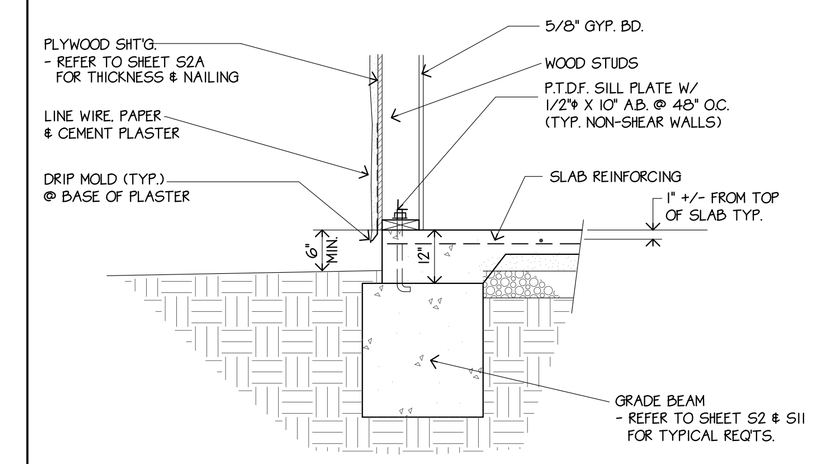

SCALE: 3/4"=1'-0"

2/S8 **DETAIL** TYPICAL EXTERIOR WALL

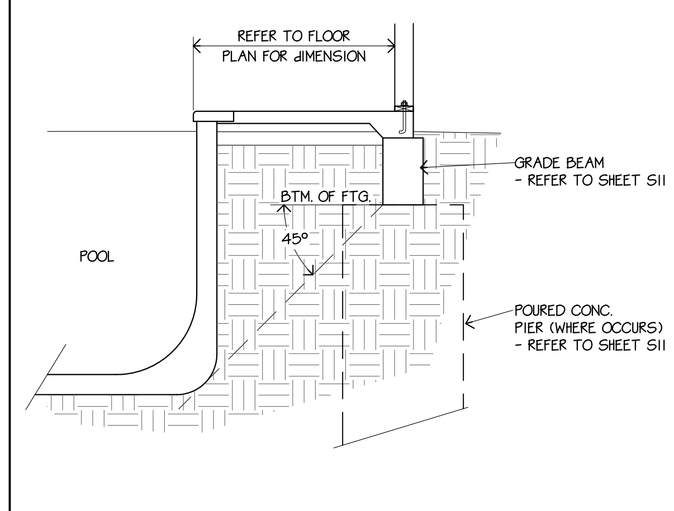

SCALE: 1 1/2"=1'-0"

9/S8 **DETAIL**

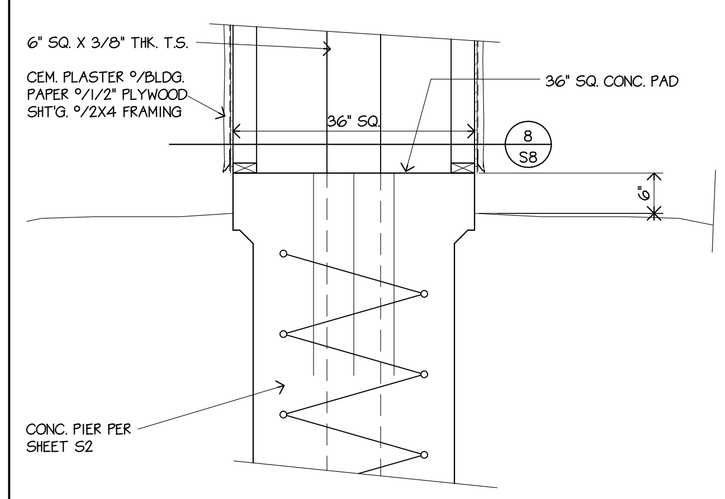

SCALE: 3/4"=1'-0"

6/S8 **DETAIL**

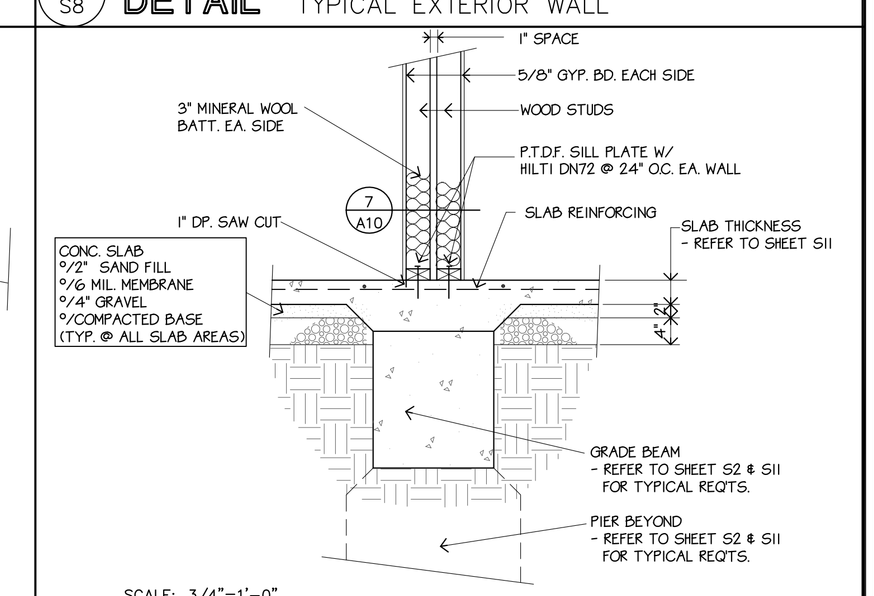

SCALE: 3/4"=1'-0"

3/S8 **DETAIL** TYPICAL WALL BETWEEN GUEST ROOMS

NOTE:
REFER TO SHEETS S2 (FOUNDATION PLAN) & S11 (GRADE BEAM & SLAB DETAILS) FOR REINFORCING WITHIN ALL AREAS

SLAB REINFORCING TO BE PLACED AT 1" BELOW TOP OF SLAB
- REFER TO DETAIL 3/S11

FOOTING DETAILS SHOWN HERE ARE TYPICAL FOR NON-SHEAR WALLS
- DETAILS ON SHEETS S6 & S7 SHALL TAKE PRECEDENCE OVER THOSE SHOWN ON THIS SHEET

CONCRETE SLAB o/2" SAND FILL
OVER 6 MIL. MEMBRANE OVER 4" GRAVEL
OVER COMPACTED BASE (TYP. @ ALL INTERIOR SLAB AREAS)

REFER TO ARCHITECTURAL DRAWINGS FOR WALL STUD SIZE & SPACING

02/09/98
LICENSED ARCHITECT
LEE GAGE
C-6718
REN. 1-31-99
STATE OF CALIFORNIA

LEE GAGE C-6718

C:\SDSKPROJ\SOUTHSFO\DWG\SFO-S8.DWG

© LEE GAGE & ASSOC.

lee gage & associates
architects • engineers • planners
7636 n. ingram suite 107 fresno, california 93711 phone (209) 439-2222

THESE DRAWINGS, DESIGNS, SPECIFICATIONS & PLANS, AND DESIGNS, ARRANGEMENTS, IDEAS & PROPOSALS EXPRESSED THEREIN ARE THE EXCLUSIVE PROPERTY OF LEE GAGE & ASSOCIATES, ARCHITECTS, AND MAY BE USED ONLY IN CONJUNCTION WITH THE ARCHITECT'S WORK. NOTHING CONTAINED HEREIN SHALL BE DEEMED TO GRANT TO ANY PERSON, FIRM OR CORPORATION ARCHITECT'S EXCLUSIVE USE ON AND IN CONJUNCTION WITH THE ARCHITECT'S WORK. NOTHING CONTAINED HEREIN SHALL BE DEEMED TO GRANT TO ANY PERSON, FIRM OR CORPORATION THE RIGHT TO USE, REPRODUCE, CONVEY OR DISCLOSE BY OR DISCLOSED TO ANY PERSON, FIRM OR CORPORATION FOR ANY PURPOSE WITHOUT EXPRESSED WRITTEN CONSENT OF LEE GAGE & ASSOCIATES.

PROPOSED:
HAMPTON INN
CORPORATE DRIVE
SOUTH SAN FRANCISCO, CA.

by	date
drawn	
checked	
revised	
revised	
project no.	

S8
sheet SET NO.