NOTE:
PROVIDE THERMAL EXPANSION TANKS ON WATER HEATER & HOT WATER STORAGE TANK INLETS PER APPL. CODES & STDS.
- INSTALL DOWNSTREAM FROM CHECK VALVES

PROVIDE PIPE INSULATION ON ENTIRE LENGTH OF HOT WATER RETURN PIPING (1" THK.)

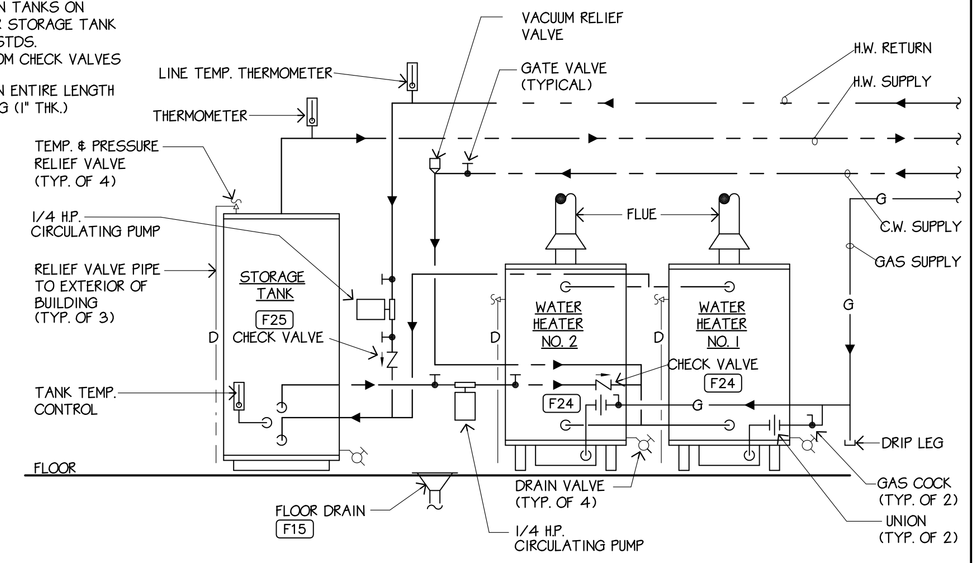

NO SCALE

1/P6 WATER HEATER & STORAGE TANK SCHEMATIC

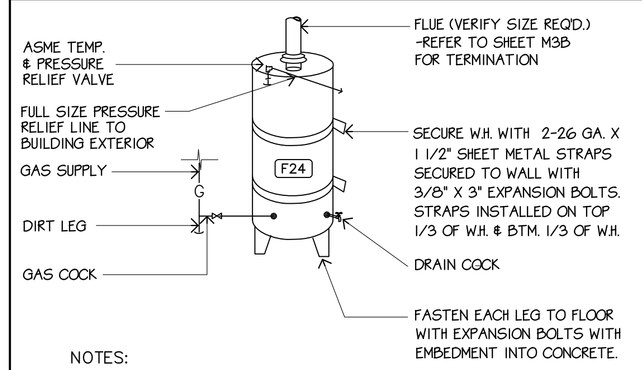

NOTES:
PIPE SIZES TO BE AS SHOWN ON PLANS & EXTENDED FULL SIZE TO WATER HEATER CONNECTION.

FOR EXACT LOCATIONS OF DROPS TO WATER HEATER, SEE PLUMBING FLOOR PLANS.

2/P6 GAS WATER HEATER/SUPPORT

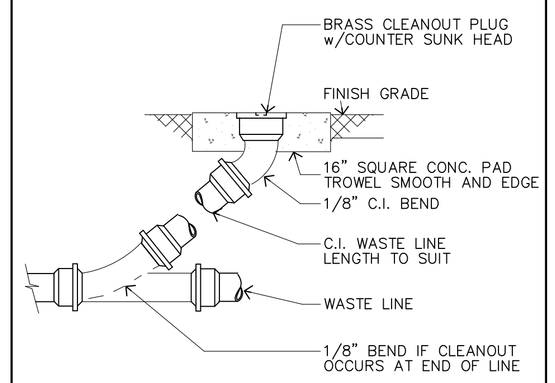

COTG

4/P6 CLEANOUT TO GRADE

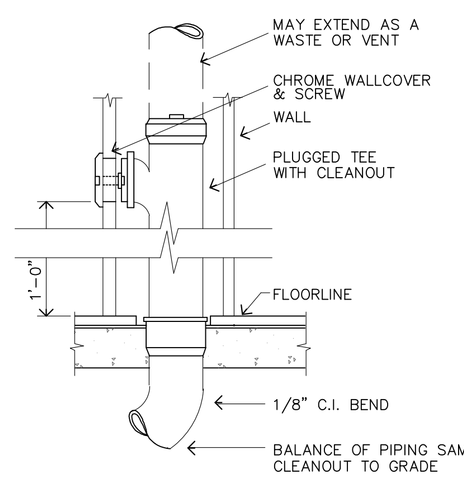

WCO

3/P6 WALL CLEANOUT DETAIL

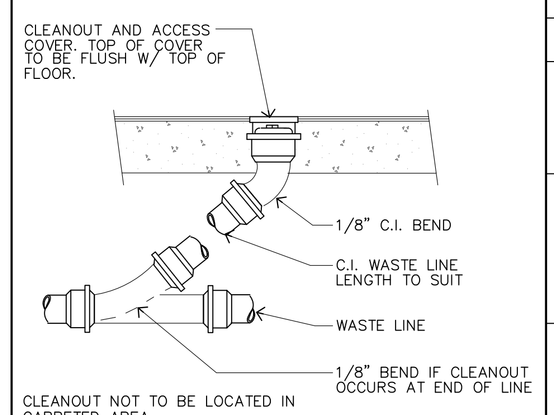

CLEANOUT NOT TO BE LOCATED IN CARPETED AREA.

FCO

5/P6 FLOOR CLEANOUT DETAIL

WATER SIZING CALCULATION

FIXTURE UNITS 697 = 160 G.P.M.

TOTAL DISTANCE FROM WATER METER TO FURTHEST FIXTURE . . . 250 FT.

TOTAL RISE FOR HEAD LOSS 33 FT. X 0.43 . . . . . 14.19 P.S.I.

P.S.I. REQUIRED FOR FLUSH TANK WATER CLOSET (APPENDIX A) . . 8.00 P.S.I.

P.S.I. FLOW LOSS THROUGH METER (APPENDIX A: CHART A-1) (2-1 1/2") 15.00 P.S.I.

P.S.I. REQUIRED FOR BACKFLOW PREVENTION DEVICE . . . . . 12.00 P.S.I.

AREA MINIMUM P.S.I. 70.00

TOTAL LOSS IN P.S.I. . . . 49.19

TOTAL REMAINING P.S.I. . . . 20.81

P.S.I. AVAILABLE 20.81 — 250 TOTAL FEET .083 X 100= 8.3

USE LINE 8 ON CHART A-5 .

3"	PIPE WILL DELIVER	290	G.P.M. TO	1550	F.T. UNITS
2 1/2"	PIPE WILL DELIVER	150	G.P.M. TO	650	F.T. UNITS
2"	PIPE WILL DELIVER	100	G.P.M. TO	375	F.T. UNITS
1 1/2"	PIPE WILL DELIVER	46	G.P.M. TO	110	F.T. UNITS
1 1/4"	PIPE WILL DELIVER	35	G.P.M. TO	65	F.T. UNITS
1"	PIPE WILL DELIVER	17	G.P.M. TO	27	F.T. UNITS
3/4"	PIPE WILL DELIVER	8	G.P.M. TO	10	F.T. UNITS
1/2"	PIPE WILL DELIVER	4	G.P.M. TO	5	F.T. UNITS

GAS PIPE SIZING SCHEDULE

TOTAL DEMAND = 1552M B.T.U. = 1411 C.F.H.
USE 150FT. COLUMN (UPC 1994) TABLE 12-3

2 1/2" PIPE GOOD FOR	1492 C.F.H.
2" PIPE GOOD FOR	936 C.F.H.
1 1/2" PIPE GOOD FOR	486 C.F.H.
1 1/4" PIPE GOOD FOR	324 C.F.H.
1" PIPE GOOD FOR	158 C.F.H.
3/4" PIPE GOOD FOR	84 C.F.H.
1/2" PIPE GOOD FOR	40 C.F.H.

LOAD DEMAND BREAKDOWN

					LINE SIZE	
WATER HEATERS (2) @ 240M BTU	=	480M BTU	436 CFH		1 1/4"ø EACH	
CLOTHES DRYERS (4) @ 200M BTU	=	800M BTU	727 CFH		1 1/4"ø EACH	
FIREPLACE	=	22M BTU	20 CFH		1/2"ø	*
SPA HEATER	=	250M BTU	227 CFH		1 1/4"ø	*
	TOTAL	1552M BTU	1411 CFH			

FAUCET & FITTINGS

FIXTURE SYM.	FAUCET CONTROL OR FITTING DESCRIPTION
F3	MOEN #8475 (4" CENTERS)/ SINGLE LEVER w/INTEGRAL POP-WASTE (CHROME)
F4	MOEN #8475 (4" CENTERS)/ SINGLE LEVER w/INTEGRAL POP-WASTE (CHROME)
F5	MOEN #L3150 VALVE (CHROME HANDLE) PRESSURE BALANCING VALVE w/ADJUSTABLE HOT LIMIT SAFETY STOP - I.P.S. DIVERTER SPOUT w/LIFTDRAIN METAL STOPPER - DRAIN: O.E.M. WATCO (COMPLETE WITH TUB WASTE & OVERFLOW) - MASSAGE TYPE SHOWER HEAD - TELEDYNE WATERPIC
F6 H/C	MOEN #L2361 VALVE (CHROME HANDLE) PRESSURE BALANCING VALVE w/ADJUSTABLE HOT LIMIT SAFETY STOP - I.P.S. DIVERTER SPOUT w/LIFTDRAIN METAL STOPPER - DRAIN: O.E.M. WATCO (COMPLETE WITH TUB WASTE & OVERFLOW) - MASSAGE TYPE SHOWER HEAD - TELEDYNE WATERPIC - HAND HELD SHOWER w/24" WALL BAR & 60" CHROME PLATED FLEXIBLE HOSE
F7	MOEN #L3150 VALVE (CHROME HANDLE) PRESSURE BALANCING VALVE w/ADJUSTABLE HOT LIMIT SAFETY STOP - I.P.S. DIVERTER SPOUT w/LIFTDRAIN METAL STOPPER - DRAIN: O.E.M. WATCO (COMPLETE WITH TUB WASTE & OVERFLOW) - MASSAGE TYPE SHOWER HEAD - COMPLETE w/ALL ACCESSORIES & FITTINGS FOR WHIRLPOOL SYSTEM & TRIM KITS, ETC.
F8 H/C	MOEN #L2361 VALVE (CHROME HANDLE) PRESSURE BALANCING VALVE w/ADJUSTABLE HOT LIMIT SAFETY STOP - COMPLETE w/DRAIN - MASSAGE TYPE SHOWER HEAD - HAND HELD SHOWER w/24" WALL BAR & 60" CHROME PLATED FLEXIBLE HOSE
F9	PRICE PFISTER GOOSENECK FAUCET #71-421 (METAL HANDLES) CHROME FINISH - PROVIDE LEVER HANDLES FOR FAUCET IN H/C ACCESSIBLE ROOM
F10	PRICE PFISTER #34-1WF FAUCET / CHROME FINISH
F11	AMERICAN STANDARD 8344-111 FAUCET W/ TOP BRACE, STOPS & VACUUM BREAKER

WASTE FIXTURE UNIT SCHEDULE

FIXTURE	NO. REQD.	UNITS-EACH	UNITS-TOTAL	WASTE	VENT
WATER CLOSET (PRIVATE)	100	4	400	3"	2"
WATER CLOSET (PUBLIC)	3	6	18	3"	2"
LAVATORY (PRIVATE)	100	1	100	2"	1 1/2"
LAVATORY (PUBLIC)	3	1	3	2"	1 1/2"
TUB OR SHOWER	100	2	200	2"	1 1/2"
BAR SINK	4	1	4	2"	1 1/2"
LAUNDRY TRAY	1	2	2	2"	1 1/2"
CLOTHES WASHER	5	2	10	4"	1 1/2"
DRINKING FOUNTAIN	1	1	1	2"	1 1/2"
KITCHEN SINK	1	2	2	2"	1 1/2"
FLOOR DRAIN	9	2	18	2"	1 1/2"
FLOOR SINK	4	1	4	2"	1 1/2"
TOTAL WASTE UNITS			762		

WATER FIXTURE UNIT SCHEDULE

FIXTURE	NO. REQD.	UNITS-EACH	UNITS-TOTAL	COLD SUPPLY	HOT SUPPLY
WATER CLOSET (PRIVATE)	100	3	300	3/4"	-
WATER CLOSET (PUBLIC)	3	5	15	3/4"	-
LAVATORY (PRIVATE)	100	1	100	1/2"	1/2"
LAVATORY (PUBLIC)	3	2	6	1/2"	1/2"
TUB OR SHOWER	100	2	200	1/2"	1/2"
BAR SINK	4	1	4	1/2"	1/2"
LAUNDRY TRAY	1	4	4	1/2"	1/2"
CLOTHES WASHER (PUBLIC)	4	10	40	1"	1"
DRINKING FOUNTAIN	1	2	2	1/2"	-
HOSE BIBB	6	3	18	3/4"	-
KITCHEN SINK	1	2	2	1/2"	1/2"
CLOTHES WASHER (PRIVATE)	1	6	6	3/4"	3/4"
TOTAL WATER UNITS			697		

PLUMBING FIXTURE SCHEDULE

SYM.	NO. REQD.	FIXTURE	MANUFACTURER	CATALOG NO.	REMARKS
F1	95	WATER CLOSET (NON H/C)	UNIVERSAL RUNDLE	UR4163	ELONG BOWL w/OPEN FR. SEAT
F2	8	WATER CLOSET (H/C)	UNIVERSAL RUNDLE	UR4156	ELONG BOWL w/OPEN FR. SEAT
F3	102	LAVATORY	UNIVERSAL RUNDLE	UR4622	UNDERCOUNTER/ CHINA LAVATORY
F4	1	LAVATORY (H/C)	AMERICAN STD.	0373.027	WALL HUNG w/SINGLE LEVER FAUCET
F5	93	TUB/SHOWER (NON H/C)	AMERICAN STD.	2461.002 (2460.002)	SLIP RESIST. FLR/AMERICAST/CAMBRIDGE
F6	4	TUB/SHOWER (H/C)	AMERICAN STD.	2461.002 (2460.002)	w/SEAT & SLIP RESIST. FLR/AMERICAST/CAMBRIDGE
F7	2	WHIRLPOOL	AMERICAN STD.	2461.028 (2460.028)	SLIP RESIST. FLR. w/WHIRLPOOL KIT AMERICAST/CAMBRIDGE
F8	1	ROLL-IN SHOWER (H/C)	FLORESTONE	44-52H	
F9	4	BAR SINK	ELKAY	PSR-1720	SINGLE BOWL w/FAUCET
F10	1	KITCHEN SINK	ELKAY	ECC-3322	DOUBLE SINK
F11	1	LAUNDRY TRAY	AMERICAN STD.	7602.124	w/PEDESTAL & WALL BRCKT. SUPPORT
F12		NOT USED			
F13	1	ELEC. WATER COOLER	HAWS	HWCA8	WALL MOUNTED H/C ACCESSIBLE
F14	4	FLOOR SINK	AMERICAN STD.	7764.062	UNDER ICE MACHINES
F15	SEE PLAN	FLOOR DRAIN	J.R. SMITH	2005-1	MECH. ROOM/POOL EQUIP ROOM/RESTROOMS
F16	SEE PLAN	FLOOR DRAIN	J.R. SMITH	2671-G	LAUNDRY ROOM TRENCH
F17	SEE PLAN	FLOOR DRAIN	J.R. SMITH	3510	w/FUNNEL DRAIN
F18	SEE PLAN	FLOOR CLEANOUT	J.R. SMITH	4251-U	
F19	SEE PLAN	WALL CLEANOUT	J.R. SMITH	4530	w/J.R. SMITH 4710 S.S. COVER
F20		NOT USED			
F21	6	HOSE BIBB	CHICAGO	562	w/VACUUM BREAKER
F22	1	BACKFLOW PREVENTER	WATTS	SERIES 309	DOMESTIC WATER SERVICE/ 3"ø SERVICE
F23		NOT USED			
F24	2	WATER HEATER	A.O. SMITH	BTC-240	100 GAL./ 240M BTU/ 200GPH @ 100° RISE
F25	1	HOT WATER STORAGE TANK	A.O. SMITH	T-200	200 GAL. CAPACITY (VERTICAL MTG.)
F26		NOT USED			

NOTE:
F2 WATER CLOSETS SHALL BE ELONGATED TYPE, 17"-19" HIGH PER TITLE 24, SEC. P1502 w/OPEN FRONT SEATS / MOUNT w/TRIP LEVERS ON WIDE SIDE

F1 & F2 LOW-FLO/ 1.6 GAL FLUSH (MAX.)

* PROVIDE METAL SCREW FASTENERS ON TOILET SEATS

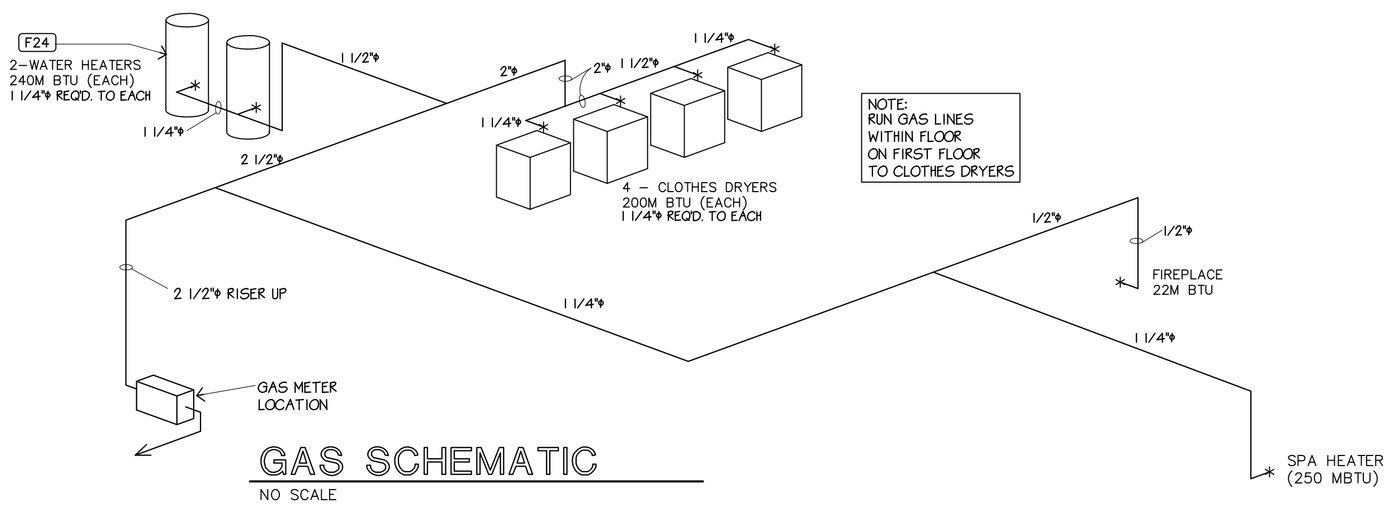

NOTE:
RUN GAS LINES WITHIN FLOOR ON FIRST FLOOR TO CLOTHES DRYERS

GAS SCHEMATIC

NO SCALE

NOTE:
ALL WATER & GAS LINES TO BE RUN IN DROPPED CEILING SPACE @ ALL FLOORS

ALL SEWER LINES TO BE RUN UNDER EACH FLOOR

PROVIDE 2" WCO UNDER LAVATORY IN EACH GUEST ROOM BATHROOM
- REFER TO DETAIL 3/P6

REFER TO OVERALL PLUMBING PLANS FOR CONTINUATION OF MAIN WATER & SEWER PIPING

02/05/98
LICENSED ARCHITECT
LEE GAGE
C-6718
REN. 1-31-99
STATE OF CALIFORNIA

LEE GAGE C-6718

C:\SDSKPROJ\SOUTHSFO\DWG\SFO-P6.DWG

© LEE GAGE & ASSOC.

lee gage & associates
architects • engineers • planners
7636 n. ingram suite 107 fresno, california 93711 phone (209) 439-2222

THESE DRAWINGS, DESIGNS, SKETCHES, & MODELS AND THE IDEAS AND DESIGNS THEREIN ARE THE EXCLUSIVE PROPERTY OF LEE GAGE & ASSOCIATES, AND WERE CREATED AND DEVELOPED BY AND FOR THE ARCHITECT'S WORK. NOTHING CONTAINED HEREIN SHALL BE USED IN CONNECTION WITH THE ARCHITECT'S WORK. NOTHING CONTAINED OR REPRESENTED ON THESE DOCUMENTS SHALL BE USED OR REPRODUCED IN ANY MANNER WHATSOEVER, NOR PROVIDED TO ANY OTHER PERSON OR ENTITY FOR ANY PURPOSE WITHOUT EXPRESSED WRITTEN CONSENT OF LEE GAGE & ASSOCIATES.

PROPOSED:
HAMPTON INN
CORPORATE DRIVE
SOUTH SAN FRANCISCO, CA.

by	date
drawn	
checked	
revised	
revised	
project no.	

P6
sheet SET NO.