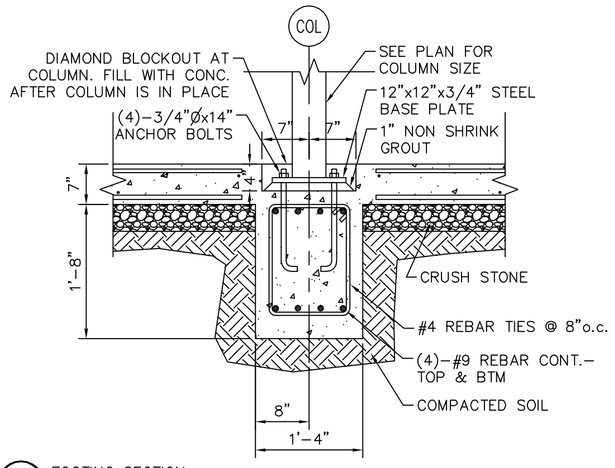

1 S5.1 FOOTING SECTION
SCALE: 3/4"= 1'-0"

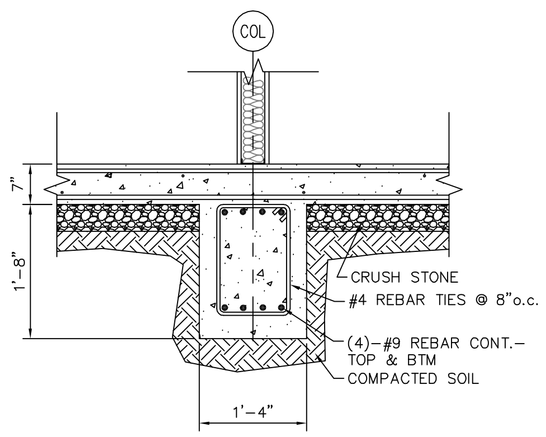

2 S5.1 FOOTING SECTION
SCALE: 3/4"= 1'-0"

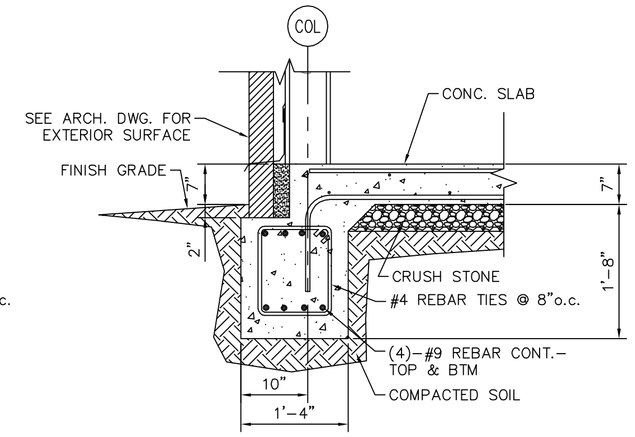

3 S5.1 FOOTING SECTION
SCALE: 3/4"= 1'-0"

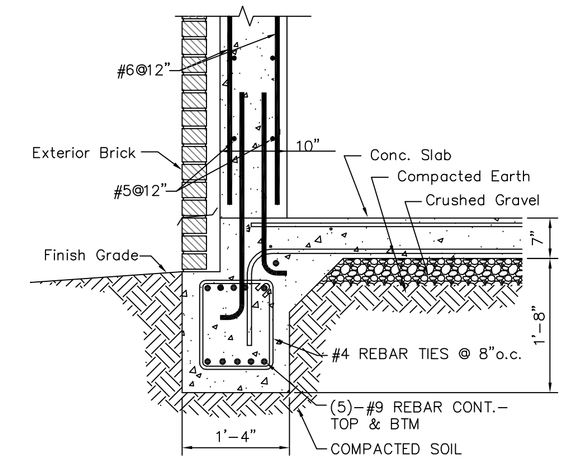

4 S5.1 FOOTING SECTION
SCALE: 3/4"= 1'-0"

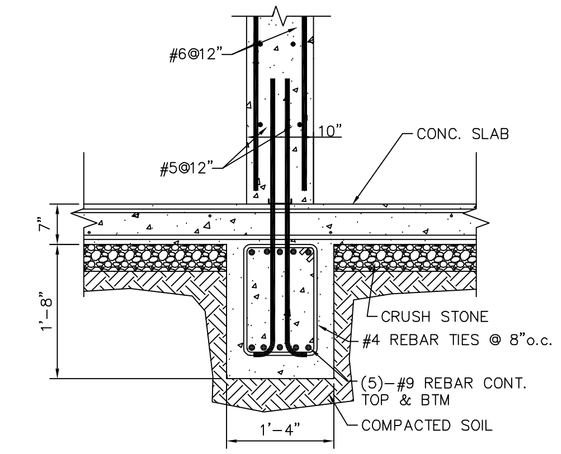

5 S5.1 FOOTING SECTION
SCALE: 3/4"= 1'-0"

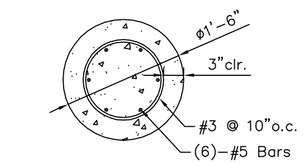

AA S5.1 18" FOOTING SECTION
SCALE: 3/4"= 1'-0"

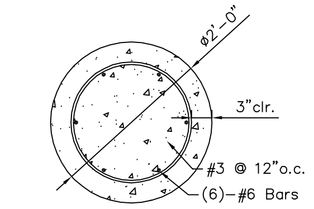

BB S5.1 24" FOOTING SECTION
SCALE: 3/4"= 1'-0"

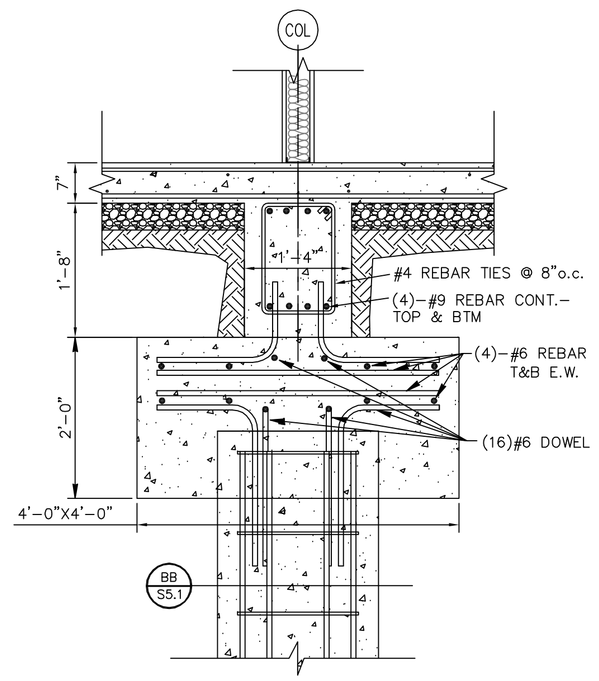

6 S5.1 FOOTING SECTION
SCALE: 3/4"= 1'-0"

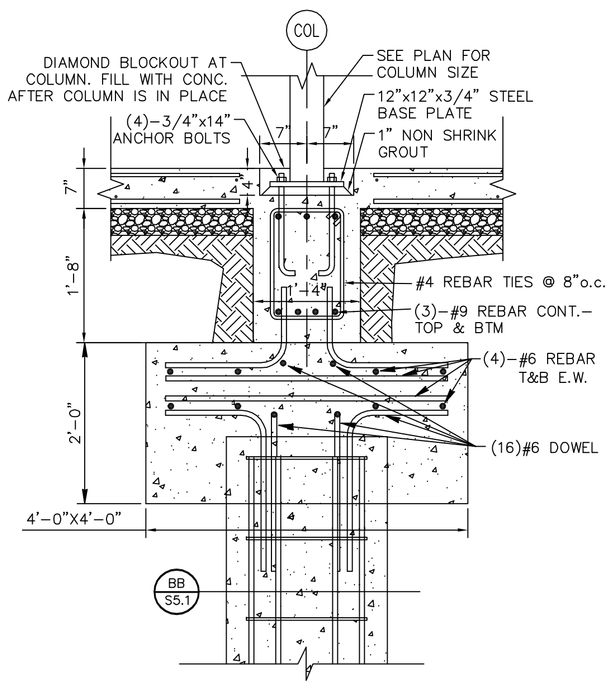

7 S5.1 FOOTING SECTION
SCALE: 3/4"= 1'-0"

F10

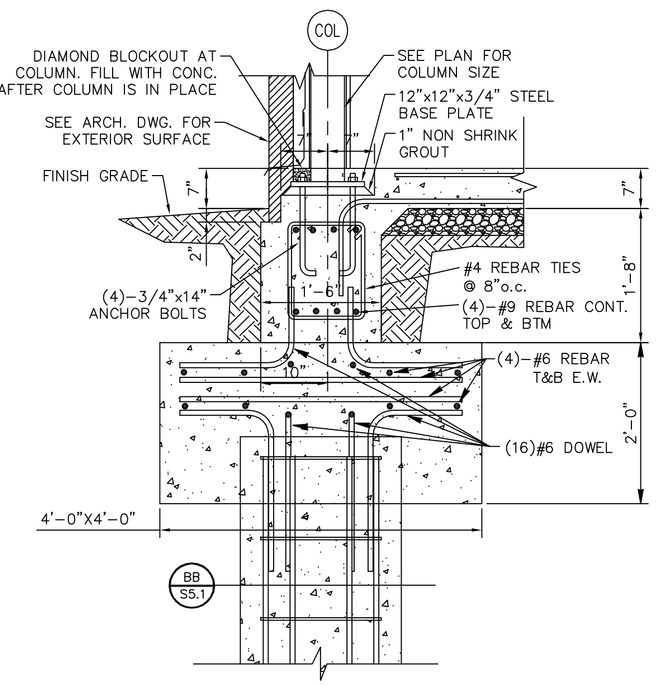

8 S5.1 FOOTING SECTION
SCALE: 3/4"= 1'-0"

F15

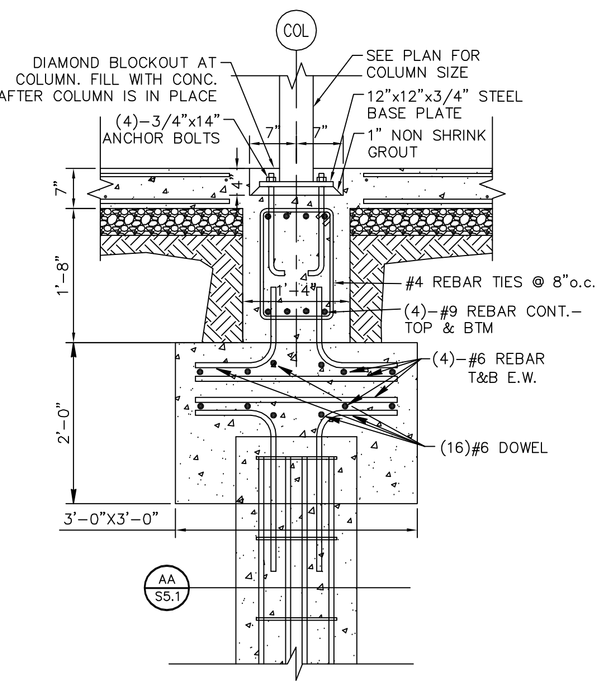

9 S5.1 FOOTING SECTION
SCALE: 3/4"= 1'-0"

F20

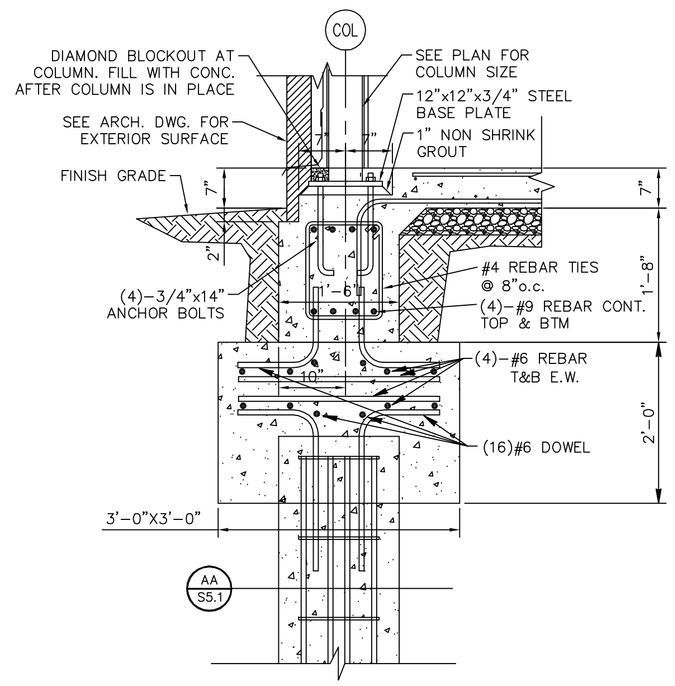

10 S5.1 FOOTING SECTION
SCALE: 3/4"= 1'-0"

F25

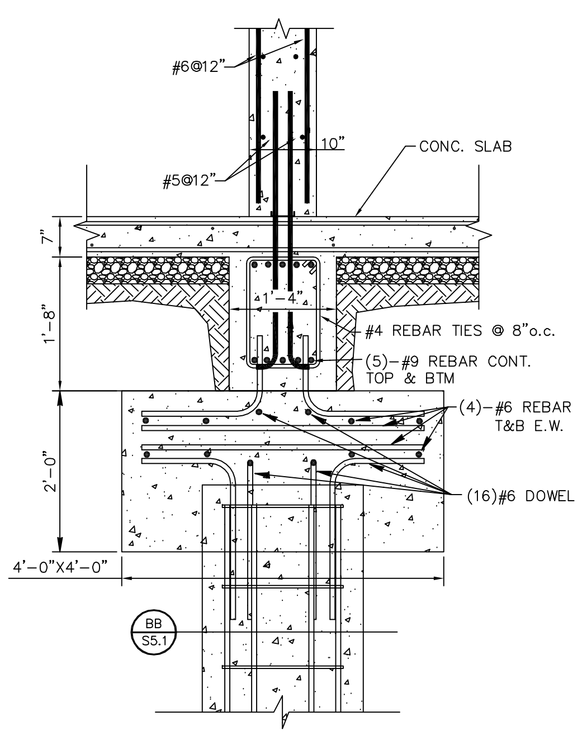

11 S5.1 FOOTING SECTION
SCALE: 3/4"= 1'-0"

F30

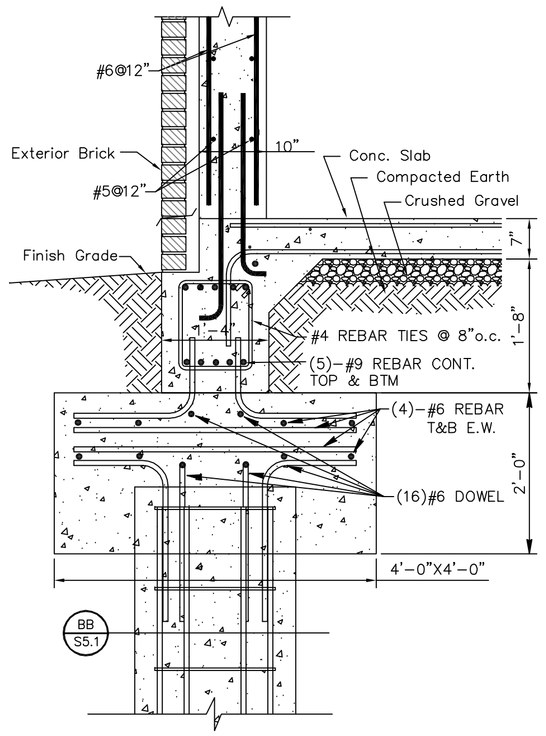

12 S5.1 FOOTING SECTION
SCALE: 3/4"= 1'-0"

F35

14 S5.1 SIM

F40

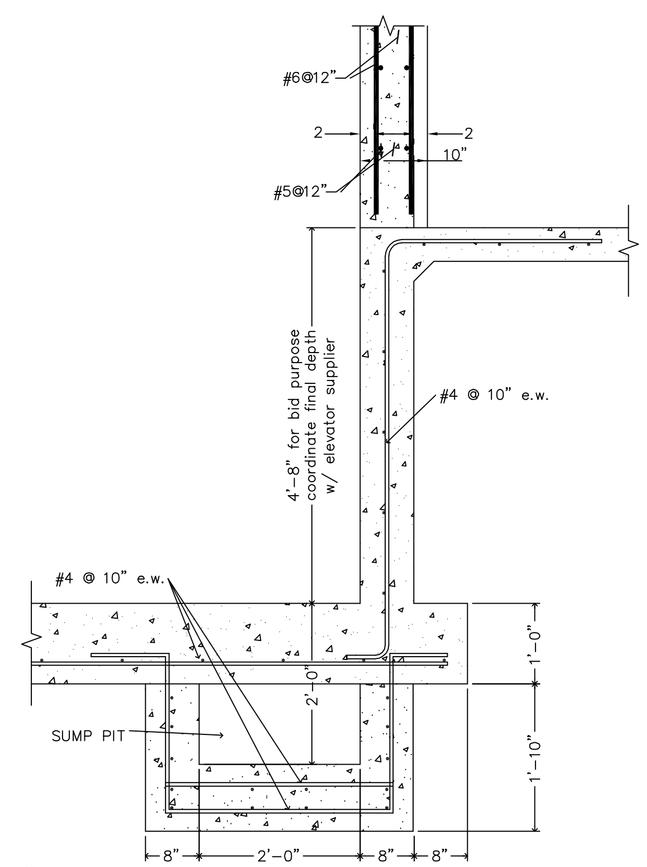

13 S5.1 FOOTING SECTION
SCALE: 3/4"= 1'-0"

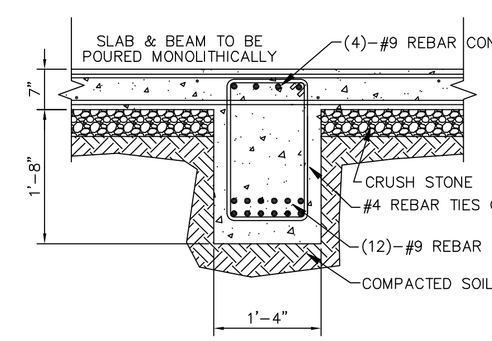

15 S5.1 FOOTING SECTION
SCALE: 3/4"= 1'-0"

NOTE: USE PILE & CAP FROM 6 S5.1 FOR THIS BEAM

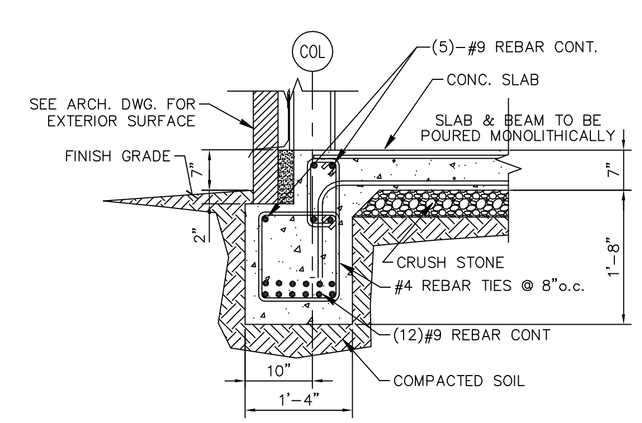

16 S5.1 FOOTING SECTION
SCALE: 3/4"= 1'-0"

NOTE: USE PILE & CAP FROM 10 S5.1 FOR THIS BEAM

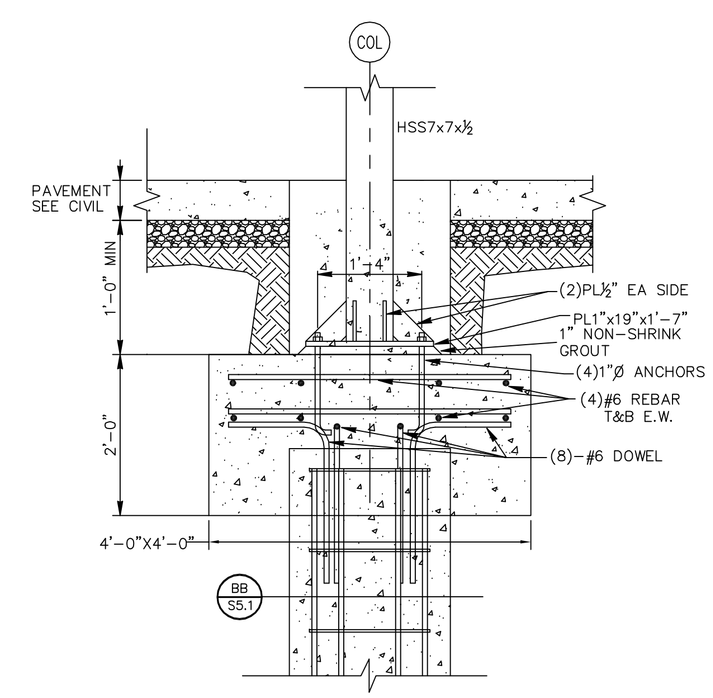

17 S5.1 FOOTING SECTION
SCALE: 3/4"= 1'-0"

LLW ARCHITECTS
803 S. MOUNT MORIAH
SUITE 100B
MEMPHIS, TN 38117
(901) 683-7175 p.
(901) 683-2385 f.
llw@llwarchitects.com

NO.	ISSUED	DATE
1	ISSUED	10/26/07

NO.	REVISIONS	DATE

COPYRIGHT BY LLW ARCHITECTS, INC
WARNING: UNAUTHORIZED COPYING VIOLATES U.S. COPYRIGHT LAWS AND WILL SUBJECT THE VIOLATOR TO LEGAL PROSECUTION.

CONSULTANTS
STRUCTURAL:
SK INTERNATIONAL, INC.
130 SOUTH MAIN STREET
HUNTSVILLE, AL 35811
(256) 852-3098

MECHANICAL:
CRABTREE ENGINEERING
726 S. MT. MORIAH
MEMPHIS, TN 38117
(901) 767-9898

PLUMBING:
CRABTREE ENGINEERING
726 S. MT. MORIAH
MEMPHIS, TN 38117
(901) 767-9898

ELECTRICAL:
CHS ENGINEERING
726 S. MT. MORIAH
MEMPHIS, TN 38117
(901) 767-2557

SEAL

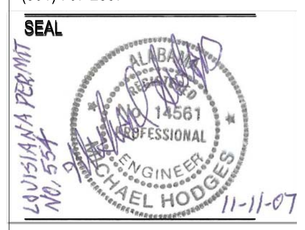

Holiday Inn MILLENNIUM

BOSSIER CITY, LOUISIANA

SHEET NAME
FOUNDATION DETAILS

DATE 10/26/07
DRAWN BY RDR
CHECKED BY MCP
FILE NAME 1507-S5.1
SCALE AS NOTED
PROJECT NO. 1507
DRAWING

S5.1