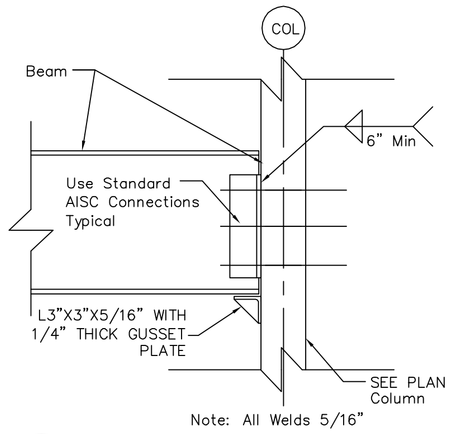

A S5.3 FRAMING SECTION
SCALE: 1"= 1'-0"

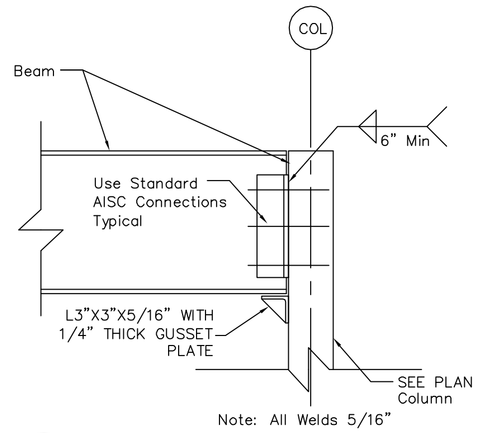

B S5.3 FRAMING SECTION
SCALE: 1"= 1'-0"

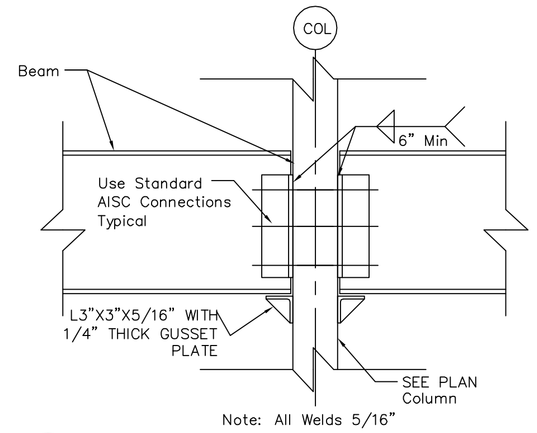

C S5.3 FRAMING SECTION
SCALE: 1"= 1'-0"

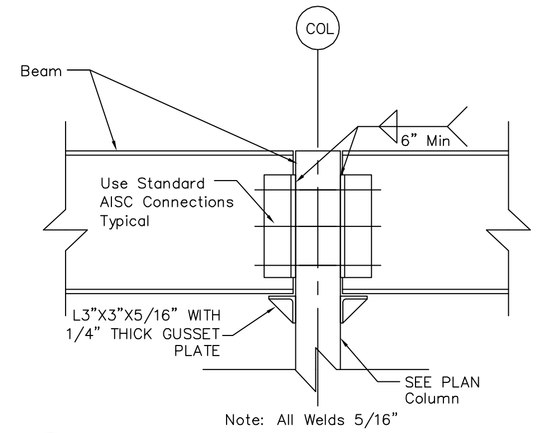

D S5.3 FRAMING SECTION
SCALE: 1"= 1'-0"

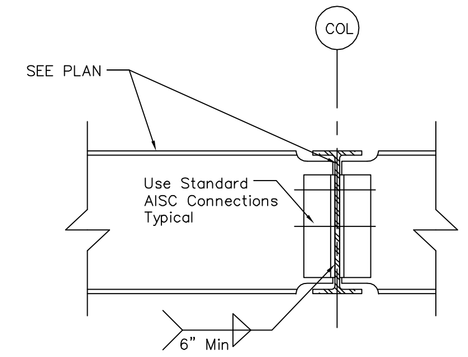

E S5.3 FRAMING SECTION
SCALE: 1"= 1'-0"

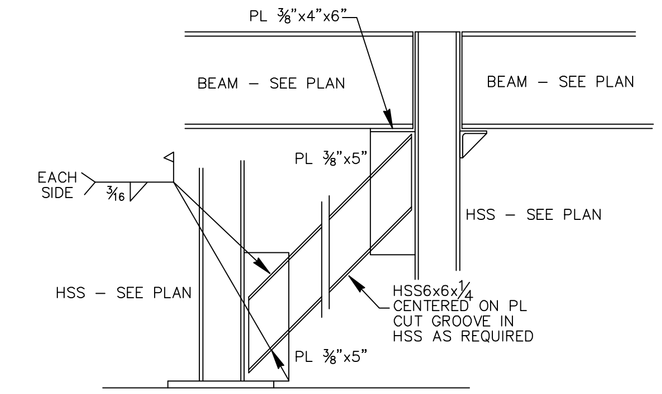

4 S5.3 CROSS BRACING
SCALE: 1"= 1'-0"

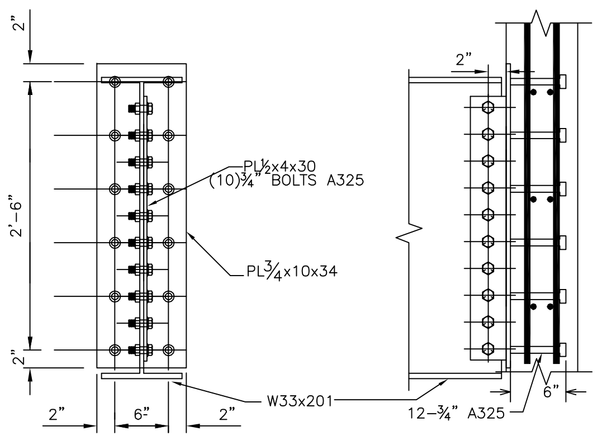

F S5.3 FRAMING SECTION
SCALE: 1"= 1'-0"

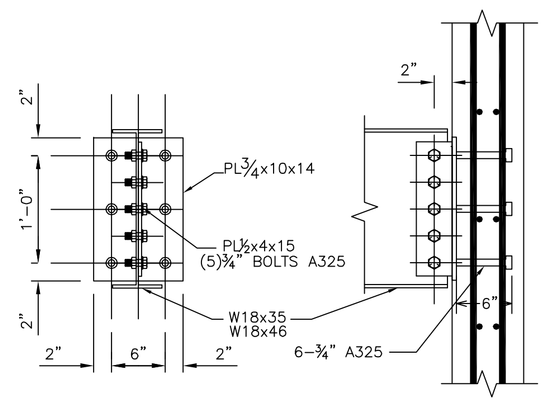

G S5.3 FRAMING SECTION
SCALE: 1"= 1'-0"

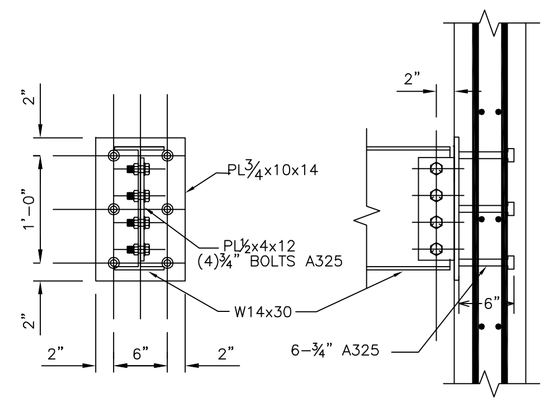

H S5.3 FRAMING SECTION
SCALE: 1"= 1'-0"

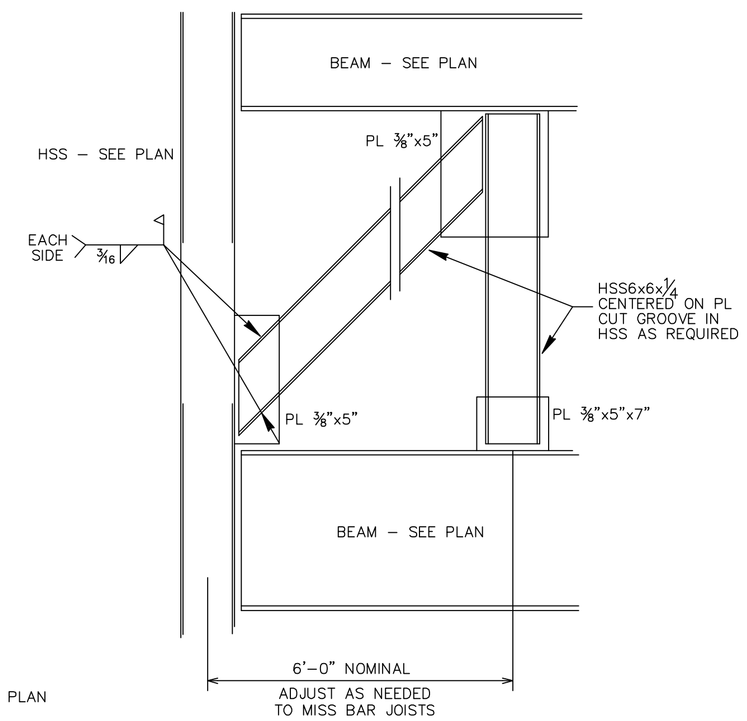

5 S5.3 CROSS BRACING
SCALE: 1"= 1'-0"

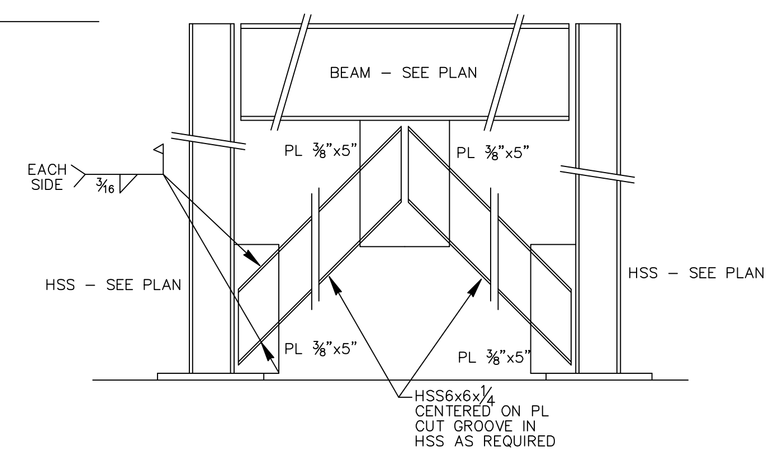

6 S5.3 CROSS BRACING
SCALE: 1"= 1'-0"

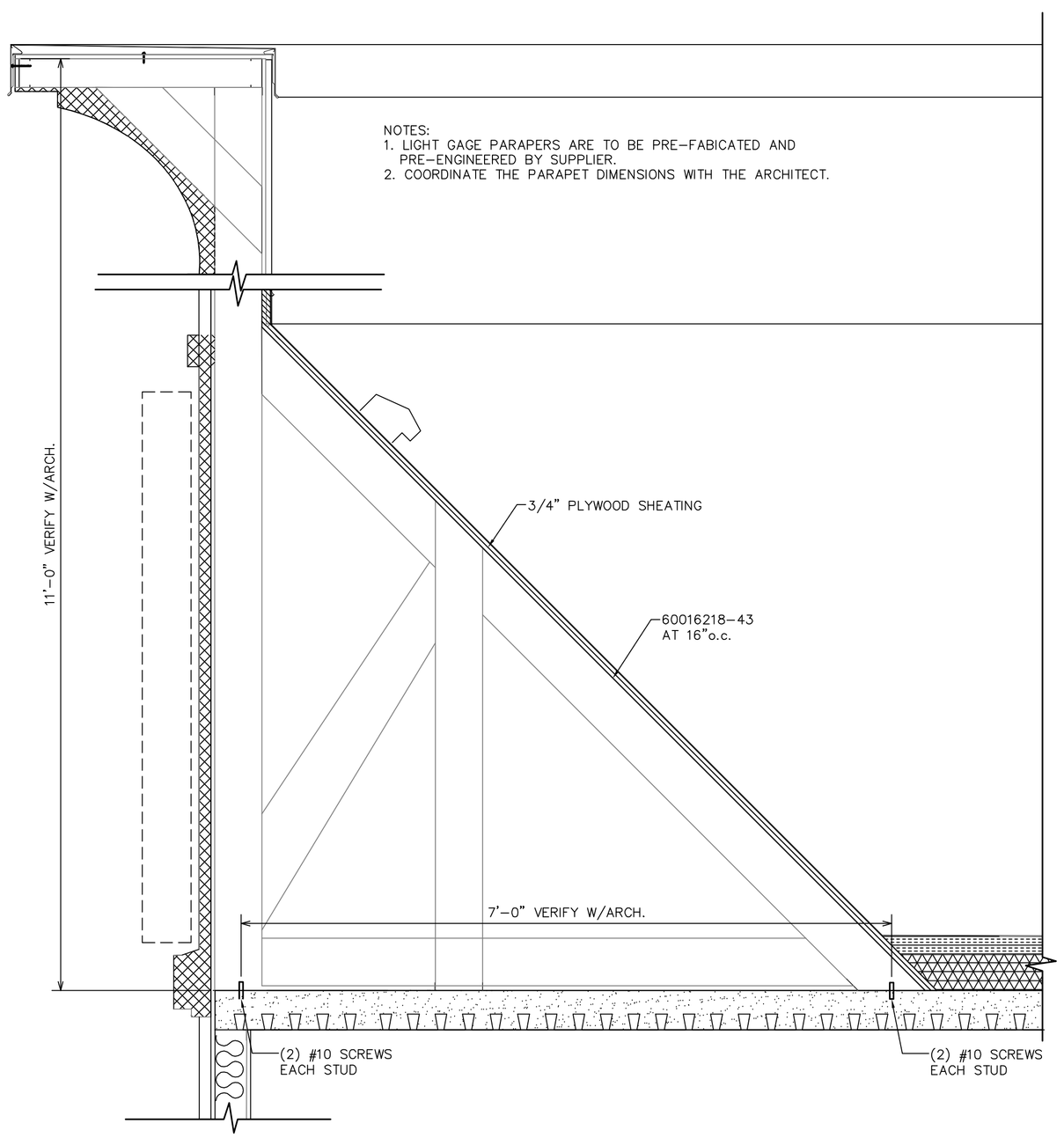

1 S5.3 FRAMING SECTION
SCALE: 1"= 1'-0"

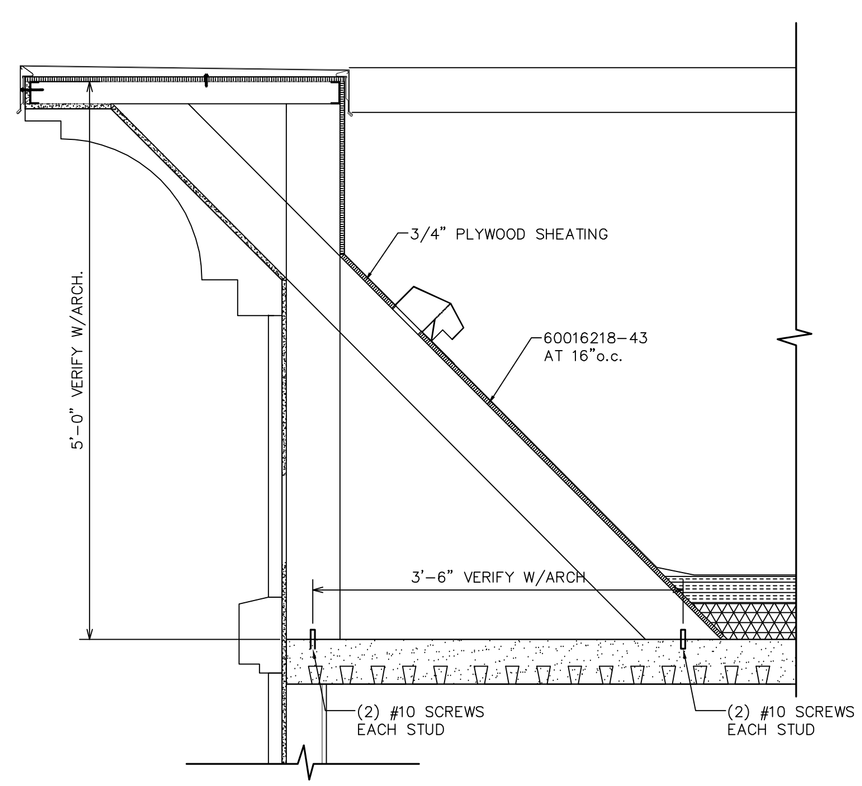

2 S5.3 FRAMING SECTION
SCALE: 1"= 1'-0"

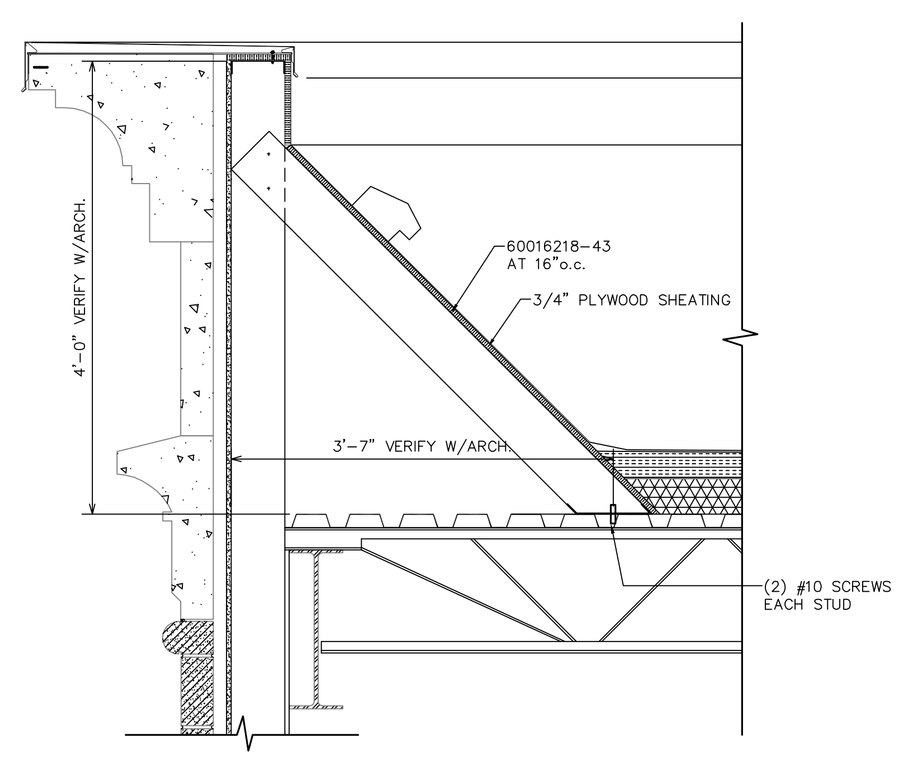

3 S5.3 FRAMING SECTION
SCALE: 1"= 1'-0"

LW ARCHITECTS
803 S. MOUNT MORIAH
SUITE 100B
MEMPHIS, TN 38117
(901) 683-7175 p.
(901) 683-2385 f.
llw@llwarchitects.com

NO.	ISSUED	DATE
1	ISSUED	10/26/07

NO.	REVISIONS	DATE

COPYRIGHT BY LLW ARCHITECTS, INC
WARNING: UNAUTHORIZED COPYING VIOLATES U.S. COPYRIGHT LAWS AND WILL SUBJECT THE VIOLATOR TO LEGAL PROSECUTION.

CONSULTANTS
STRUCTURAL:
SK INTERNATIONAL, INC.
130 SOUTH MAIN STREET
HUNTSVILLE, AL 35811
(256) 852-3098

MECHANICAL:
CRABTREE ENGINEERING
726 S. MT. MORIAH
MEMPHIS, TN 38117
(901) 767-9898

PLUMBING:
CRABTREE ENGINEERING
726 S. MT. MORIAH
MEMPHIS, TN 38117
(901) 767-9898

ELECTRICAL:
CHS ENGINEERING
726 S. MT. MORIAH
MEMPHIS, TN 38117
(901) 767-2557

SEAL

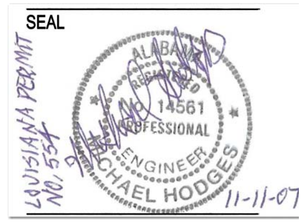

Holiday Inn MILLENNIUM
BOSSIER CITY, LOUISIANA

SHEET NAME
FRAMING DETAILS

DATE 10/26/07
DRAWN BY RDR
CHECKED BY MCP
FILE NAME 1507-S5.2-3
SCALE AS NOTED
PROJECT NO. 1507
DRAWING

S5.3