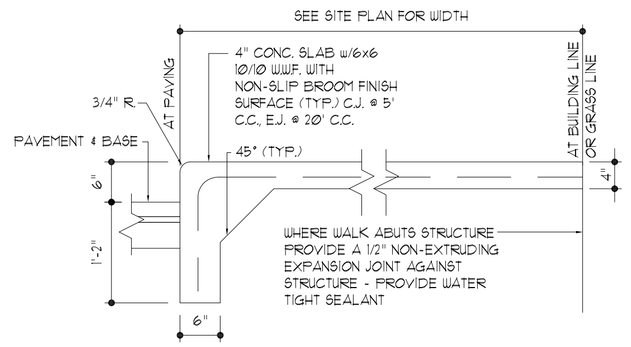

1 Section Detail Sidewalk SCALE: 3/4" = 1'-0"

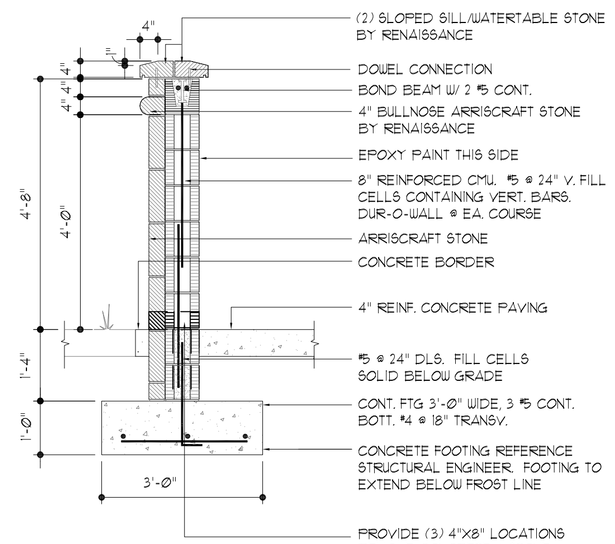

2 Section Detail Screen Wall SCALE: 1/2" = 1'-0"

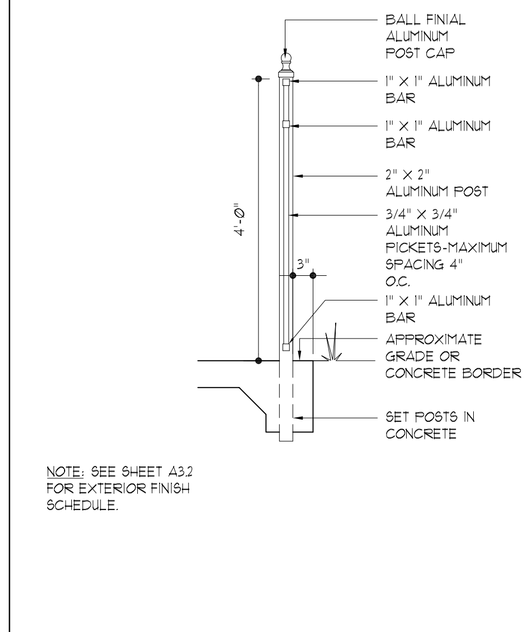

3 Section Detail Pool Terrace Rail SCALE: 3/4" = 1'-0"

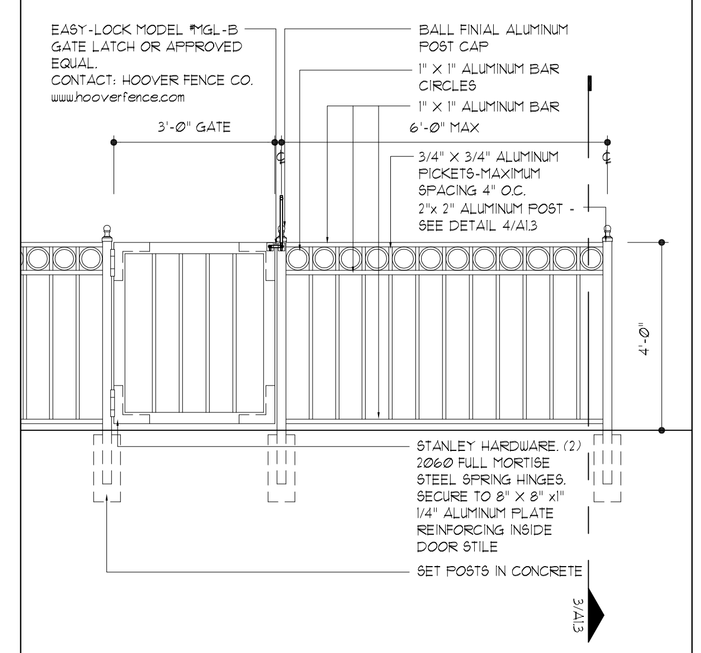

4 Elevation Detail Pool Terrace Rail & Gate SCALE: 1/2" = 1'-0"

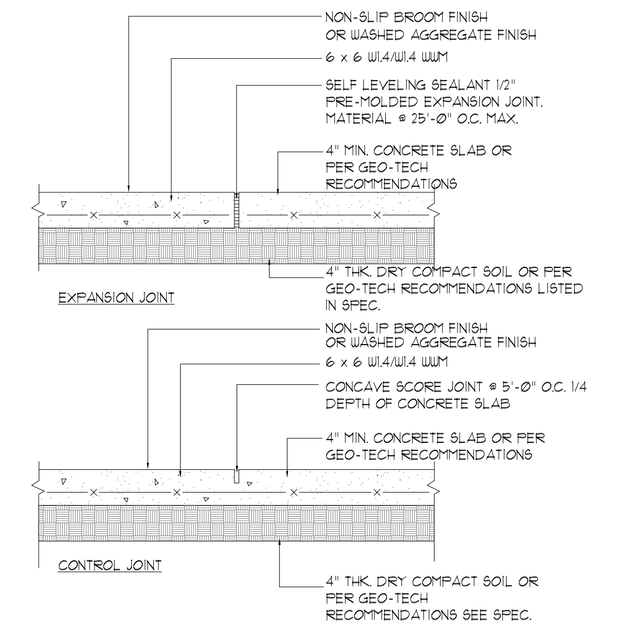

5 Section Detail Expansion & Control Joints SCALE: 1" = 1'-0"

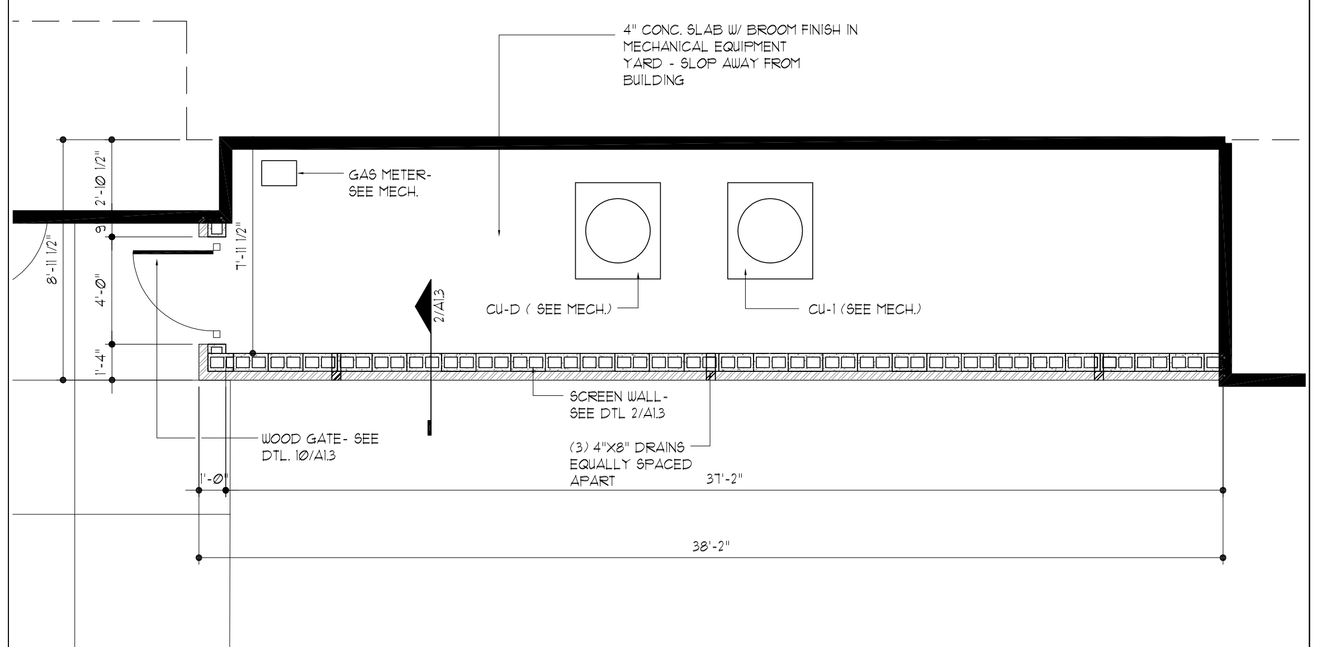

6 Plan Detail Mechanical Yard SCALE 1/4" = 1'-0"

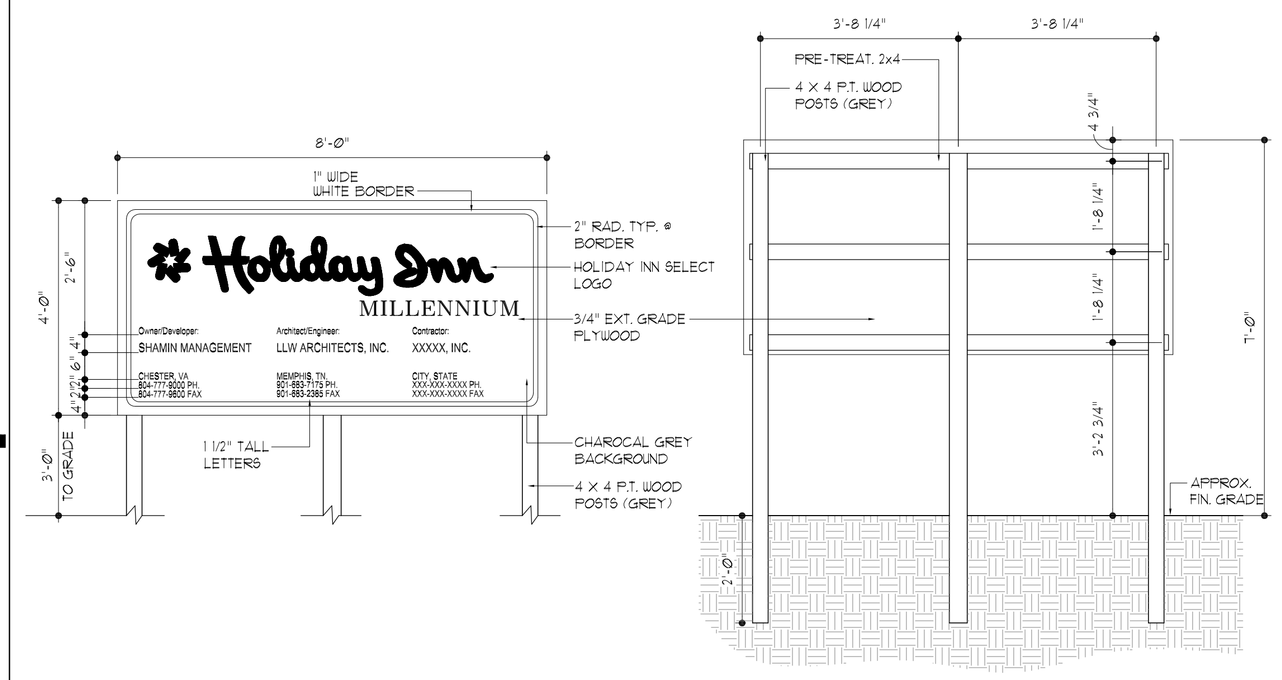

8 Elevation & Section Detail Project Sign SCALE: 3/4" = 1'-0"

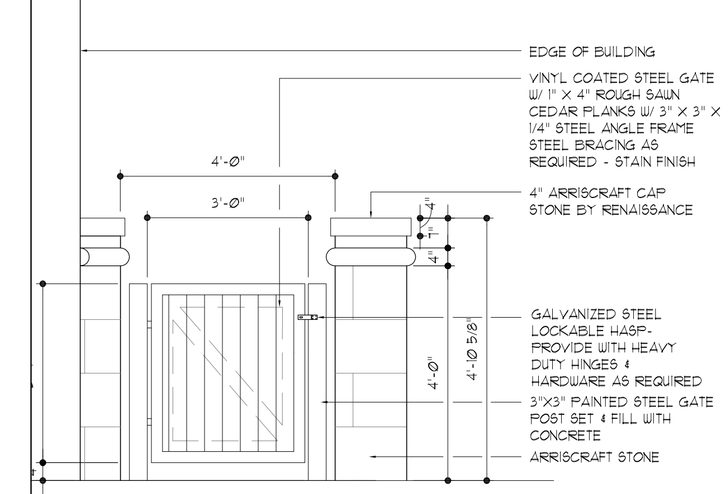

10 Elevation Detail Wood Gate @ Mechanical Wall Scale: 1/2" = 1'-0"

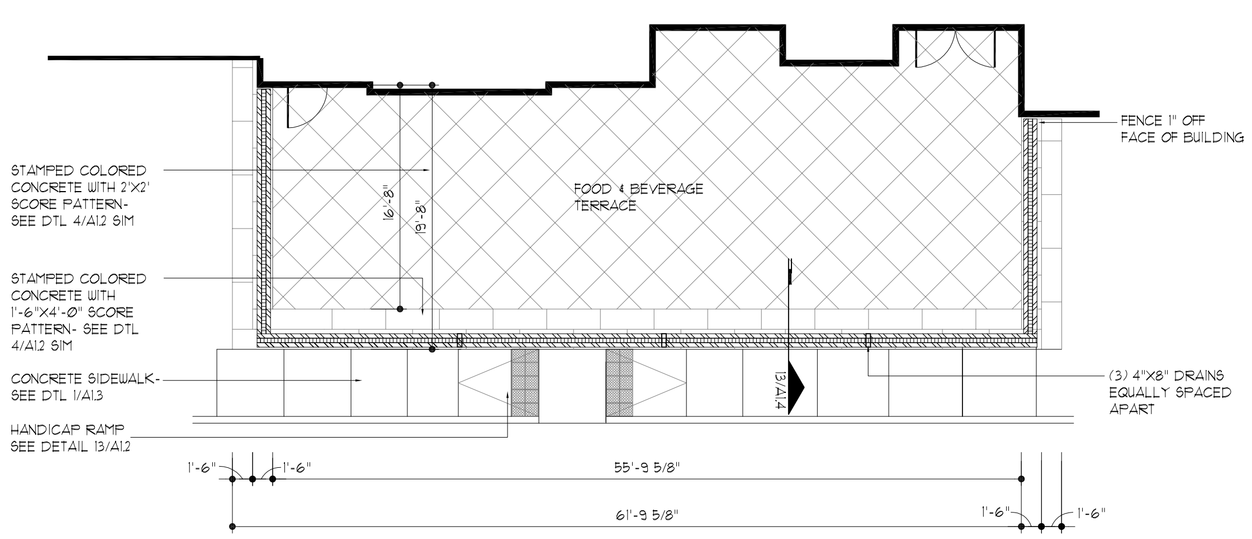

11 Plan Detail Food and Beverage Terrace SCALE: 1/8" = 1'-0"

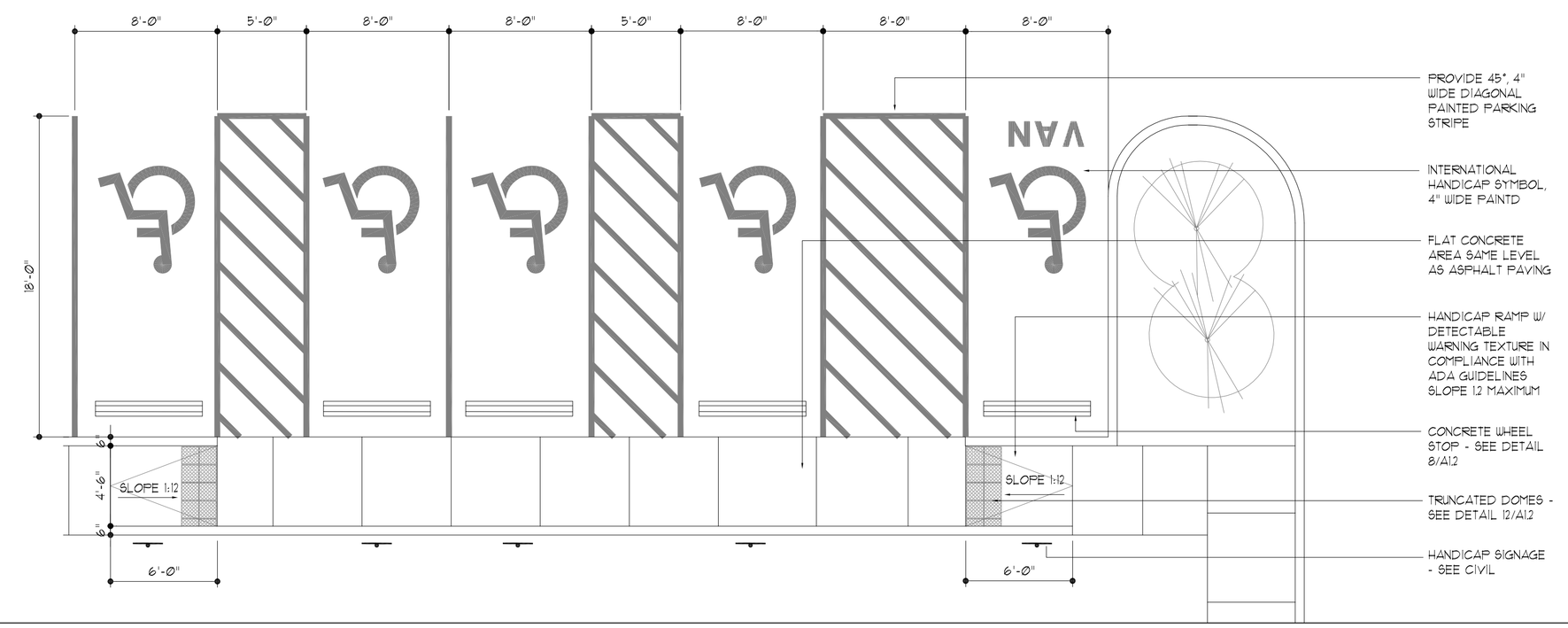

13 Plan Detail Handicap Parking Stalls SCALE: 3/16" = 1'-0"

LLW ARCHITECTS

803 S. MOUNT MORIAH
SUITE 100B
MEMPHIS, TN 38117
(901) 683-7175 p.
(901) 683-2385 f.
llw@llwarchitects.com

NO.	ISSUED	DATE
1	ISSUED	10/26/07

NO.	REVISIONS	DATE

COPYRIGHT BY LLW ARCHITECTS, INC WARNING: UNAUTHORIZED COPYING VIOLATES U.S. COPYRIGHT LAWS AND WILL SUBJECT THE VIOLATOR TO LEGAL PROSECUTION.

CONSULTANTS
STRUCTURAL:
SK INTERNATIONAL, INC.
130 SOUTH MAIN STREET
HUNTSVILLE, AL 35811
(256) 852-3098

MECHANICAL:
CRABTREE ENGINEERING
726 S. MT. MORIAH
MEMPHIS, TN 38117
(901) 767-9898

PLUMBING:
CRABTREE ENGINEERING
726 S. MT. MORIAH
MEMPHIS, TN 38117
(901) 767-9898

ELECTRICAL:
CHS ENGINEERING
726 S. MT. MORIAH
MEMPHIS, TN 38117
(901) 767-2557

SEAL

Holiday Inn MILLENNIUM
BOSSIER CITY, LOUISIANA

SHEET NAME
SITE DETAILS

DATE 10/26/07
DRAWN BY JW
CHECKED BY PEL
FILE NAME 1507-A103
SCALE AS NOTED
PROJECT NO. 1507
DRAWING

A1.3