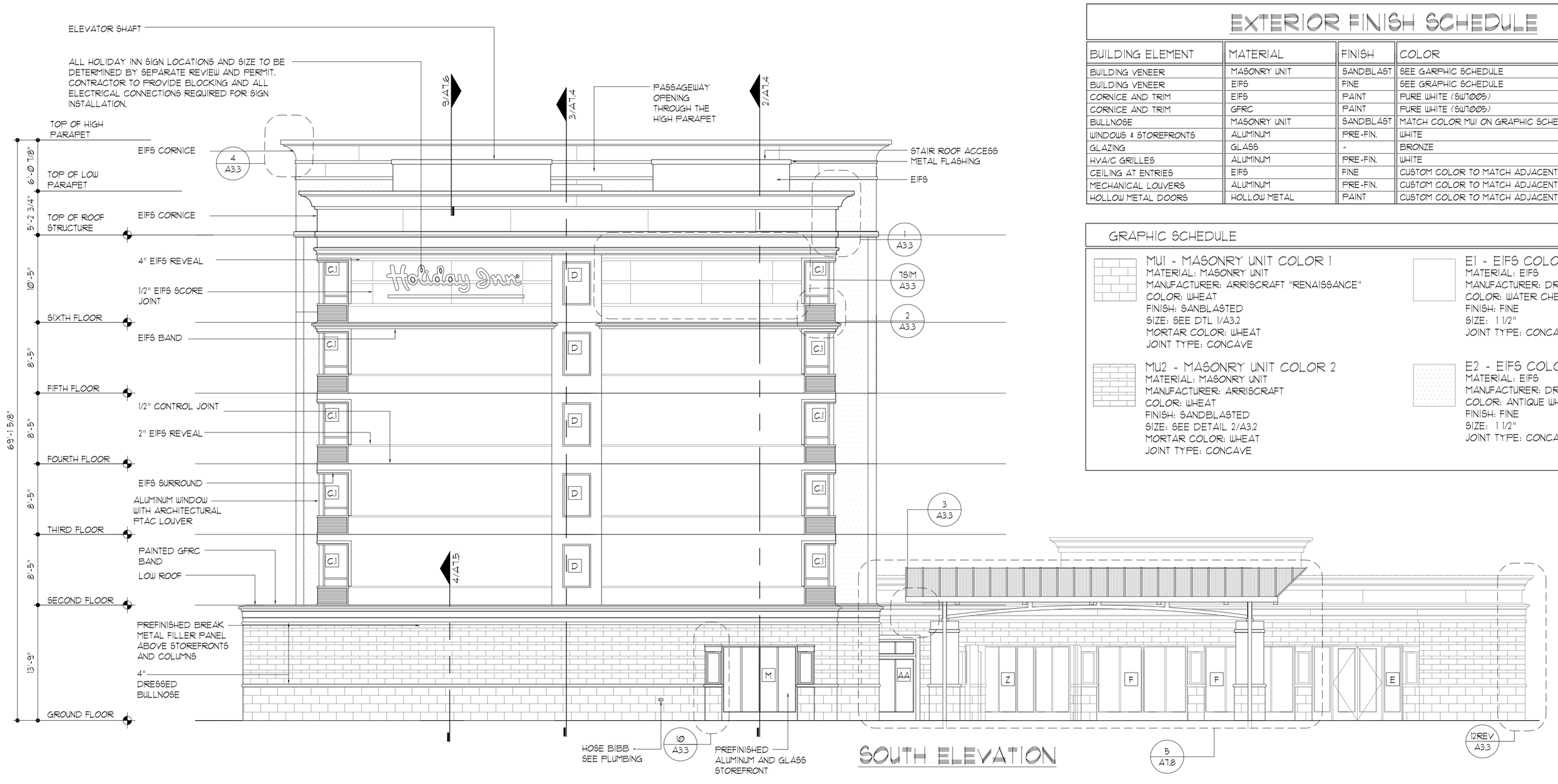

SOUTH ELEVATION

SCALE: 1/8" = 1'-0"

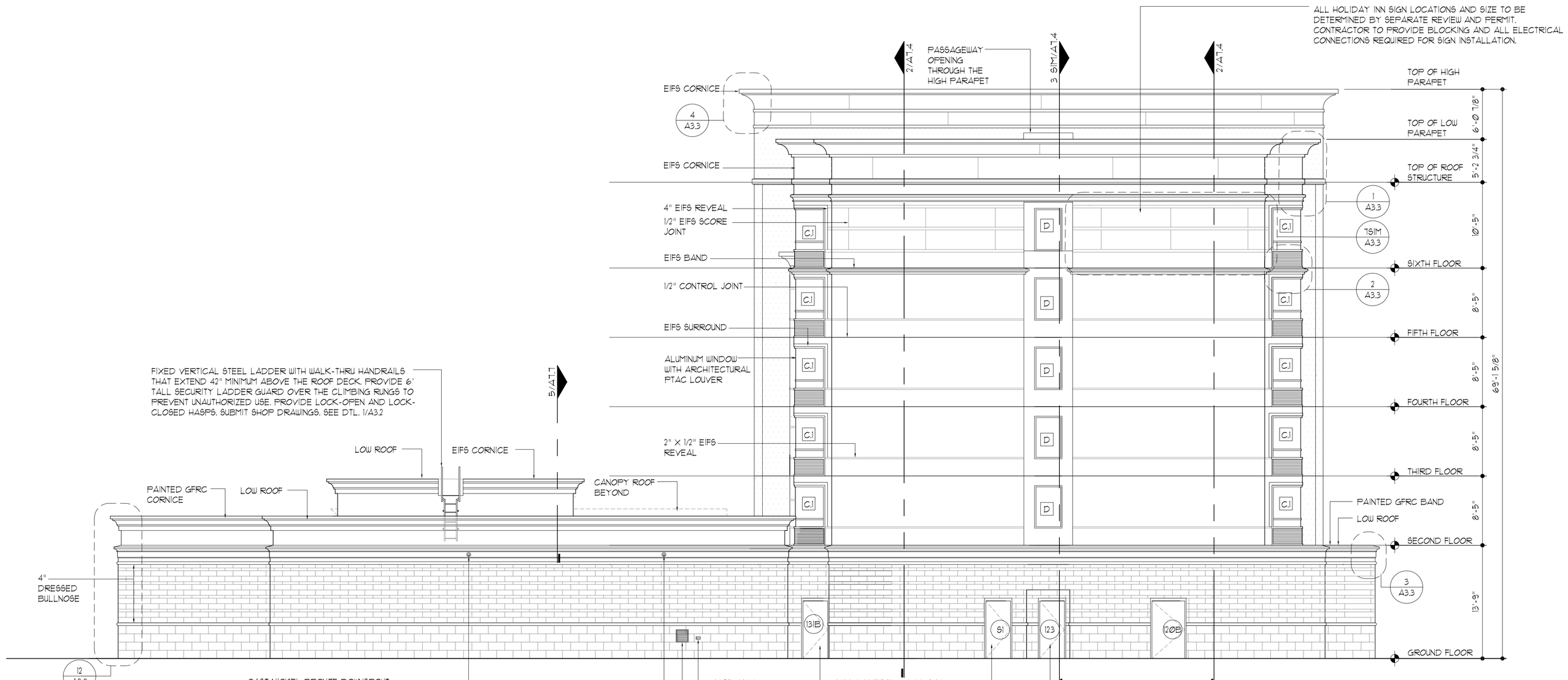

NORTH ELEVATION

EXTERIOR ELEVATIONS

SCALE: 1/8" = 1'-0"

EXTERIOR FINISH SCHEDULE

BUILDING ELEMENT	MATERIAL	FINISH	COLOR	NOTES
BUILDING VENEER	MASONRY UNIT	SANDBLAST	SEE GARPHIC SCHEDULE	5
BUILDING VENEER	EIFS	FINE	SEE GRAPHIC SCHEDULE	
CORNICE AND TRIM	EIFS	PAINT	PURE WHITE (SW7005)	
CORNICE AND TRIM	GFRC	PAINT	PURE WHITE (SW7005)	
BULLNOSE	MASONRY UNIT	SANDBLAST	MATCH COLOR MU1 ON GRAPHIC SCHEDULE	
WINDOWS & STOREFRONTS	ALUMINUM	PRE-FIN.	WHITE	2, 3
GLAZING	GLASS	-	BRONZE	
HVA/C GRILLES	ALUMINUM	PRE-FIN.	WHITE	3
CEILING AT ENTRIES	EIFS	FINE	CUSTOM COLOR TO MATCH ADJACENT SURFACE	1, 4
MECHANICAL LOUVERS	ALUMINUM	PRE-FIN.	CUSTOM COLOR TO MATCH ADJACENT SURFACE	4
HOLLOW METAL DOORS	HOLLOW METAL	PAINT	CUSTOM COLOR TO MATCH ADJACENT SURFACE	4

GRAPHIC SCHEDULE

MU1 - MASONRY UNIT COLOR 1
MATERIAL: MASONRY UNIT
MANUFACTURER: ARRISCRAFT "RENAISSANCE"
COLOR: WHEAT
FINISH: SANBLASTED
SIZE: SEE DTL 1/A3.2
MORTAR COLOR: WHEAT
JOINT TYPE: CONCAVE

MU2 - MASONRY UNIT COLOR 2
MATERIAL: MASONRY UNIT
MANUFACTURER: ARRISCRAFT
COLOR: WHEAT
FINISH: SANDBLASTED
SIZE: SEE DETAIL 2/A3.2
MORTAR COLOR: WHEAT
JOINT TYPE: CONCAVE

E1 - EIFS COLOR 1
MATERIAL: EIFS
MANUFACTURER: DRYVIT
COLOR: WATER CHESTNUT SW1136
FINISH: FINE
SIZE: 1 1/2"
JOINT TYPE: CONCAVE

E2 - EIFS COLOR 2
MATERIAL: EIFS
MANUFACTURER: DRYVIT
COLOR: ANTIQUE WHITE SW1137
FINISH: FINE
SIZE: 1 1/2"
JOINT TYPE: CONCAVE

FINISH SCHEDULE NOTES

1. EIFS COLORS AND TEXTURES AS MANUFACTURED BY DRYVIT OR EQUAL
2. PTAC GRILLE IS INTEGRAL TO WINDOW FRAME
3. WHITE ALUMINUM FINISH
4. PAINT TO MATCH ADJACENT SURFACE
5. MASONRY UNIT PRODUCT VENDOR:
   BRICK AND BLOCK PRODUCTS
   4004 HIGHWAY 59
   MANDEVILLE, LA 70470
   (985) 892-7567
   SALES: JOHN CAIN

GENERAL NOTES

1. SEE FINISH SCHEDULE FOR INFORMATION ON VARIOUS BUILDING ELEMENTS.
2. ALL EXTERIOR HOLLOW METAL DOORS AND FRAMES AT FIRST FLOOR AND ALL LOUVERS PREFINISHED TO MATCH ADJACENT COLOR.
3. PROVIDE BLOCKING AND POWER FOR SIGNAGE AT ALL LOCATIONS.
4. SEE DOOR SCHEDULE FOR DOOR DIMENSIONS AND INFORMATION.
5. SEE WINDOW SCHEDULE FOR WINDOW DIMENSIONS AND INFORMATION.

ELEVATION KEY LEGEND

C	WINDOW KEY - SEE WINDOW SCHEDULE FOR WINDOW DIMENSIONS
X	DOOR KEY - SEE DOOR SCHEDULE FOR DOOR DIMENSIONS
WALL	WALL SECTION KEY

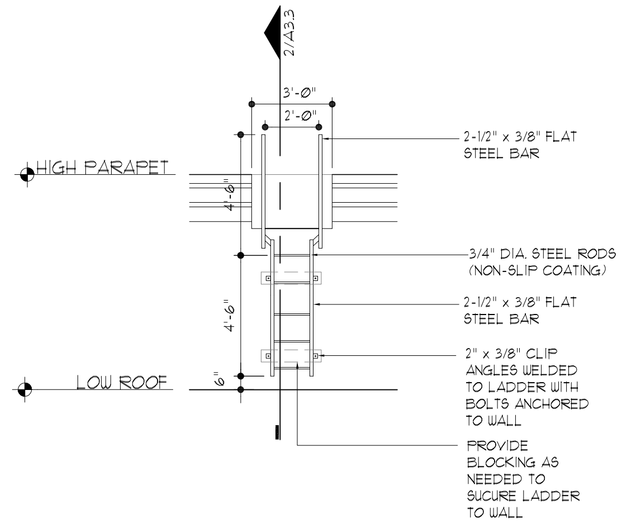

1 / A3.2 ELEVATION DETAIL - ROOF ACCESS LADDER
SCALE: 1/4" = 1'-0"

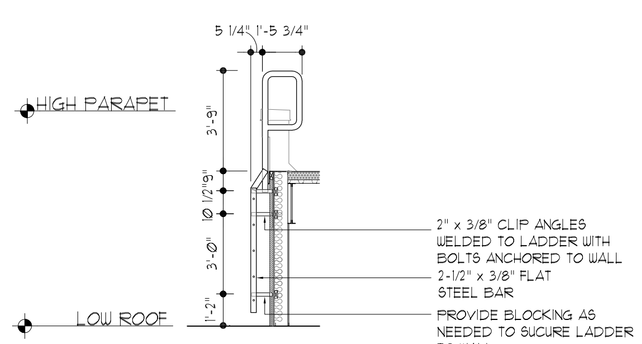

2 / A3.2 SECTION DETAIL - ROOF ACCESS LADDER
SCALE: 1/4" = 1'-0"

LLW ARCHITECTS
803 S. MOUNT MORIAH
SUITE 100B
MEMPHIS, TN 38117
(901) 683-7175 p.
(901) 683-2385 f.
llw@llwarchitects.com

NO.	ISSUED	DATE
1	ISSUED	10/26/07

NO.	REVISIONS	DATE

COPYRIGHT BY LLW ARCHITECTS, INC
WARNING: UNAUTHORIZED COPYING VIOLATES U.S. COPYRIGHT LAWS AND WILL SUBJECT THE VIOLATOR TO LEGAL PROSECUTION.

CONSULTANTS
STRUCTURAL:
SK INTERNATIONAL, INC.
130 SOUTH MAIN STREET
HUNTSVILLE, AL 35811
(256) 852-3098

MECHANICAL:
CRABTREE ENGINEERING
726 S. MT. MORIAH
MEMPHIS, TN 38117
(901) 767-9898

PLUMBING:
CRABTREE ENGINEERING
726 S. MT. MORIAH
MEMPHIS, TN 38117
(901) 767-9898

ELECTRICAL:
CHS ENGINEERING
726 S. MT. MORIAH
MEMPHIS, TN 38117
(901) 767-2557

SEAL

Holiday Inn MILLENNIUM
BOSSIER CITY, LOUISIANA

SHEET NAME
EXTERIOR ELEVATIONS

DATE 10/26/07
DRAWN BY JRS
CHECKED BY PL
FILE NAME 1507-A302
SCALE AS NOTED
PROJECT NO. 1507
DRAWING A3.2