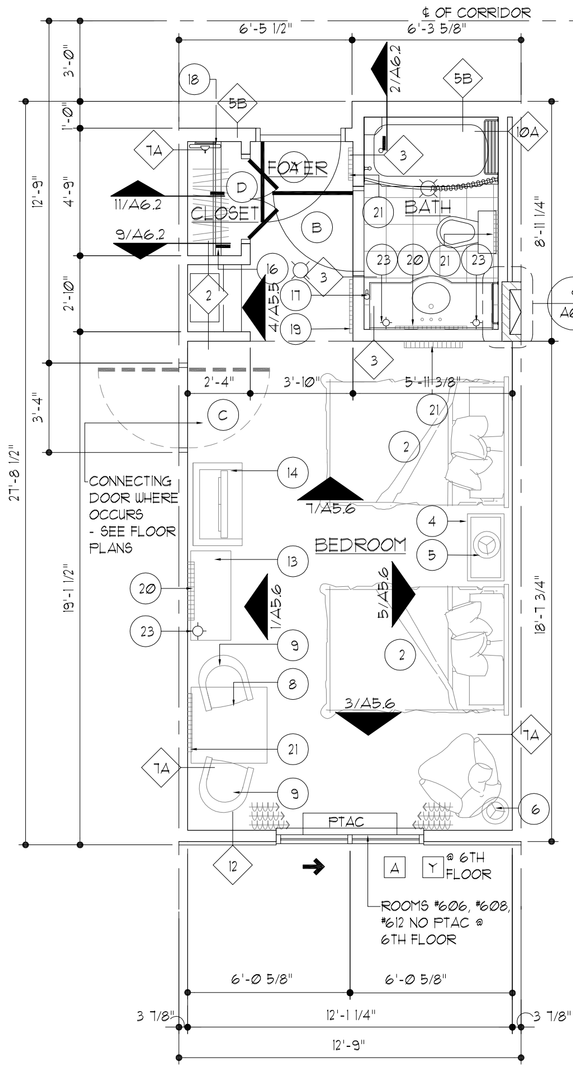

DOUBLE QUEEN
KING W/ TUB SIM -SEE KING W/SHOWER FOR FURNITURE LAYOUT
SEE 1/A5.1 FOR ADDITIONAL BATH INFO.

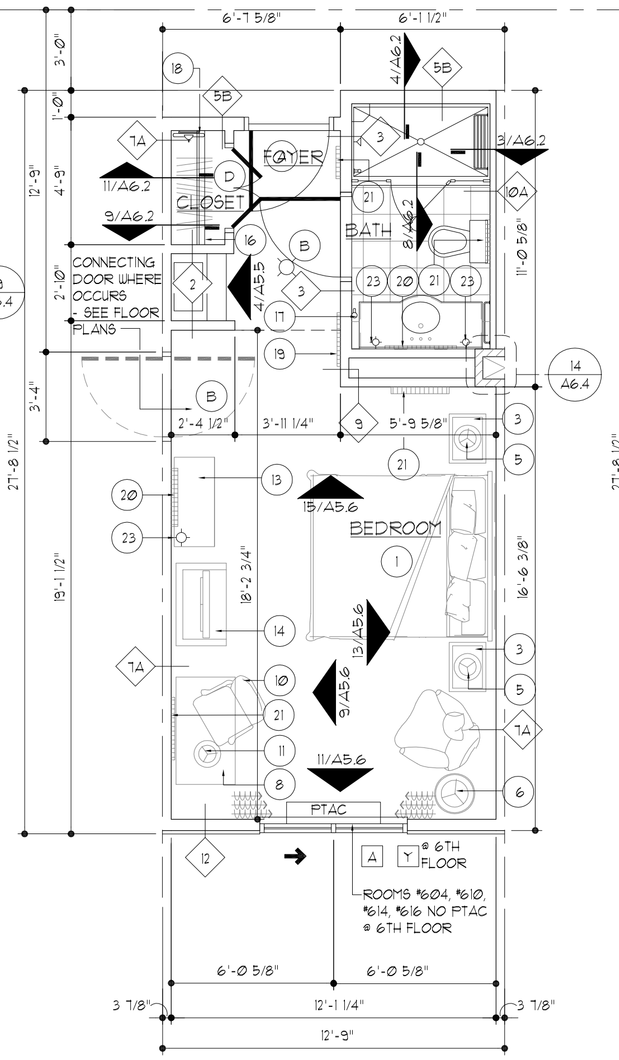

KING W/ SHOWER
SEE 6/A5.1 FOR ADDITIONAL BATH INFO.

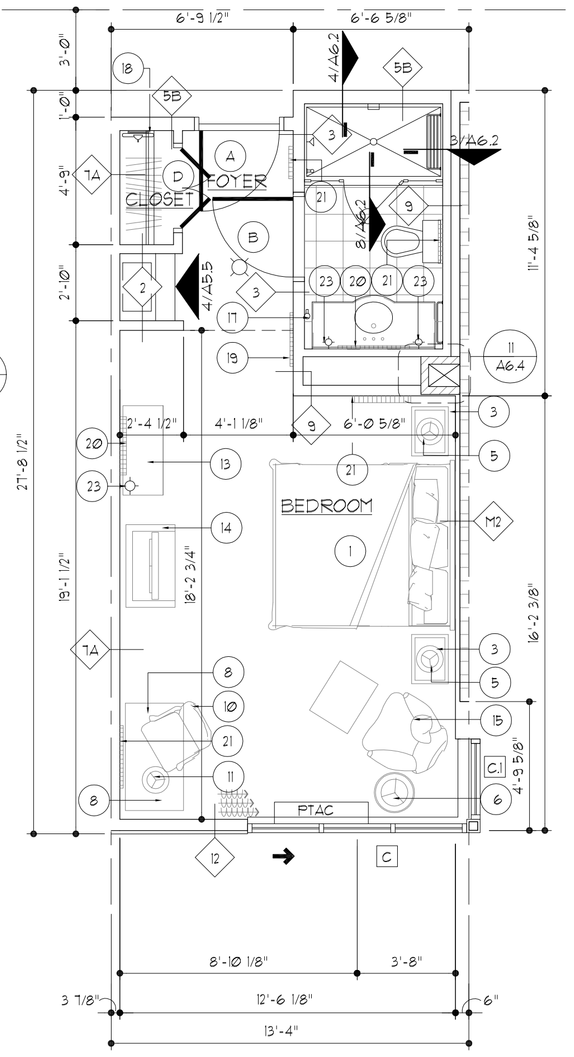

KING CORNER
SEE 6/A5.1 FOR ADDITIONAL BATH INFO.

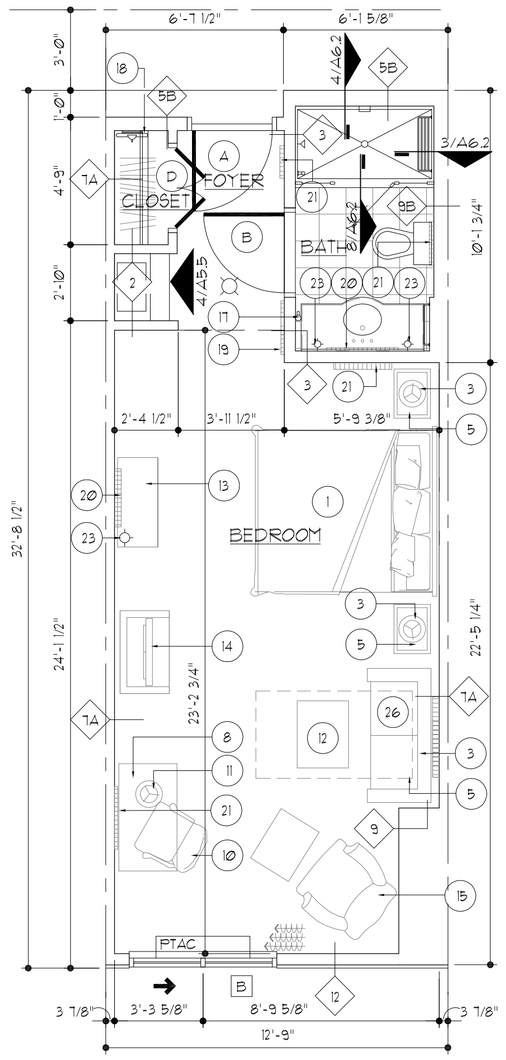

KING EXTENDED
SEE 6/A5.1 FOR ADDITIONAL BATH INFO.

NOTES:

1. ALL DIMENSIONS ARE TO CENTERLINE OR TO FACE OF FINISHED WALL U.N.O.
2. IN ADDITION TO THE HANDICAP ACCESSIBLE ROOMS, ROOMS IDENTIFIED "HEARING IMPAIRED" (2) SHALL COMPLY WITH 9.3.1 OF ADA ACCESSIBILITY GUIDELINES. SEE ELECTRICAL FOR DEVICE REQUIREMENTS.
3. SEE SHEET A9.3 FOR WALL TYPES.
4. ALL EXTERIOR DOORS TO RECEIVE ALUMINUM THRESHOLDS.
5. FULL HEIGHT COLORED CORNER GUARDS AT ALL OUTSIDE WALLS IN GUEST ROOMS PUBLIC AREAS, BACK OF HOUSE AREAS, & CORRIDORS @ ALL FLOORS.
6. PROVIDE CONTINUOUS 2 HOUR ENCLOSURE AROUND ALL BATH EXHAUST & OTHER MECHANICAL SHAFT CONDITIONS - HORIZONTALLY AND VERTICALLY. SEE FIRE RATING PLANS.
7. ACOUSTICAL SEALANT SHALL BE USED AT ALL CEILING, FLOOR & WALL CONDITIONS @ GUESTROOMS & ALL OTHER WALLS REQUIRING SOUND PROTECTION (SEE WALL TYPES & SPECS).
8. G.C. TO PROVIDE BLOCKING FOR ALL ACCESSORIES, BUILDING ITEMS, AND OWNER FF&E ITEMS THAT ARE WALL OR CEILING MOUNTED.
9. PROVIDE ACCESS PANELS AS REQUIRED. (SEE ENGINEERING DRAWINGS).
10. PROVIDE SOUND BATT INSULATION IN STUD WALLS @ ELEVATOR EQUIPMENT, LAUNDRY AND ALL MECHANICAL ROOMS/CLOSETS. PROVIDE RIGID INSULATION IN CEILING @ ELEVATOR EQUIPMENT, LAUNDRY ROOM & DRYERS.
11. CR REPRESENTS CARD READER. IF SHOWN ON A WALL, REPRESENTS A REMOTE CARD READER.
12. FEC REPRESENTS 10 POUND DRY CHEMICAL ABC FIRE EXTINGUISHER HAVING A UL. 4A-60BC RATING WITH FIRE EXTINGUISHER CABINET. SEE DTL. 8/A6.4
13. FE REPRESENTS 10 POUND DRY CHEMICAL ABC FIRE EXTINGUISHER HAVING A UL. 4A-60BC RATING WITH WALL MOUNTING BRACKET. (SEE SPEC).
14. P.H. INDICATES PANIC HARDWARE. PROVIDE PANIC HARDWARE AT ALL EXIT DOORS AND STAIR DOORS ON ALL FLOORS.
15. INDICATES SHAFT WALL
16. INDICATES HEARING-IMPAIRED ROOM (SEE NOTE 2)
17. A MINIMUM OF 75% OF THE TOTAL ROOM COUNT MUST BE DESIGNATED AS NON-SMOKING.
18. ALL PLYWOOD SHALL BE FIRE-RETARDANT TREATED.
19. ALL EXPOSED ELECTRICAL PANELS MUST BE FINISHED TO MATCH ADJACENT WALL FINISHES.
20. ALL RAIN LEADERS TO CONNECT TO STORM DRAINAGE - SEE PLUMBING.
21. ALL PREF AREA EQUIPMENT (EXCEPT SINKS) ARE OFCI.
22. ALL EXERCISE EQUIPMENT IS OFCI.

FURNISHINGS LEGEND

1 KING BED - HEAD BOARD	16 SHELF & ROD (TYP) - SEE DTL 15/A6.1
2 QUEEN BED - HEAD BOARD	17 HAIR DRYER
3 NIGHT STAND - 22"W X 16"D	18 IRON & IRONING BOARD - OFCI
4 NIGHT STAND - 36"W X 16"D	19 FULL LENGTH MIRROR - 18"W x 60"H
5 TABLE LAMP - PLUG WIRED	20 FRAMED MIRROR
6 FLOOR LAMP - PLUG WIRED	21 FRAMED ARTWORK
7 ACTIVITY TABLE - 34" DIA.	22 CEILING MOUNTED LIGHT
8 DESK - 48"W x 26"D x 30"H	23 WALL MOUNTED LIGHT
9 ACTIVITY CHAIR	24 HOSPITALITY UNIT WITH UNDERCOUNTER REFRIGERATOR AND MICROWAVE
10 ERGONOMIC DESK CHAIR	25 COFFEE MAKER
11 DESK LAMP - PLUG WIRED	26 LOVESEAT SLEEPER
12 COCKTAIL TABLE	27 QUEEN SLEEPER SOFA
13 LUGGAGE BENCH	
14 3 DRAWERS CHESR W/ FLAT PANEL TV	ALL DIMENSIONS LISTED ARE MINIMUM REQUIREMENT PER HOLIDAY INN STANDARDS
15 LOUNGE CHAIR WITH OTTOMAN	

KEY LEGEND

1	WALL TYPE KEY (SEE SHEET A9.3)
00	ROOM FINISH KEY (SEE SHEET A9.1)
1	DOOR KEY (SEE SHEET A9.2)
A B C D 1/A00	ELEVATION KEY (SEE SHEET NUMBER INSIDE OF KEY)
	2 HOUR SHAFT ASSEMBLY
A	WINDOW KEY (SEE SHEET A9.3)

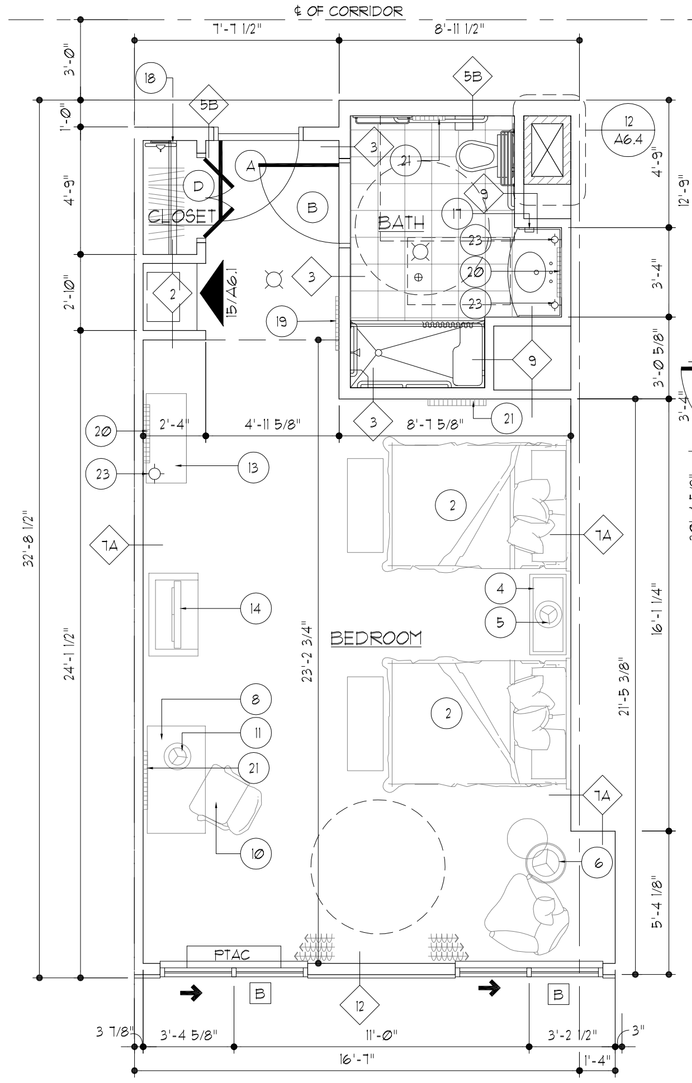

ACCESSIBLE DOUBLE QUEEN W/ R16
SEE 11/A5.1 FOR ADDITIONAL BATH INFO.

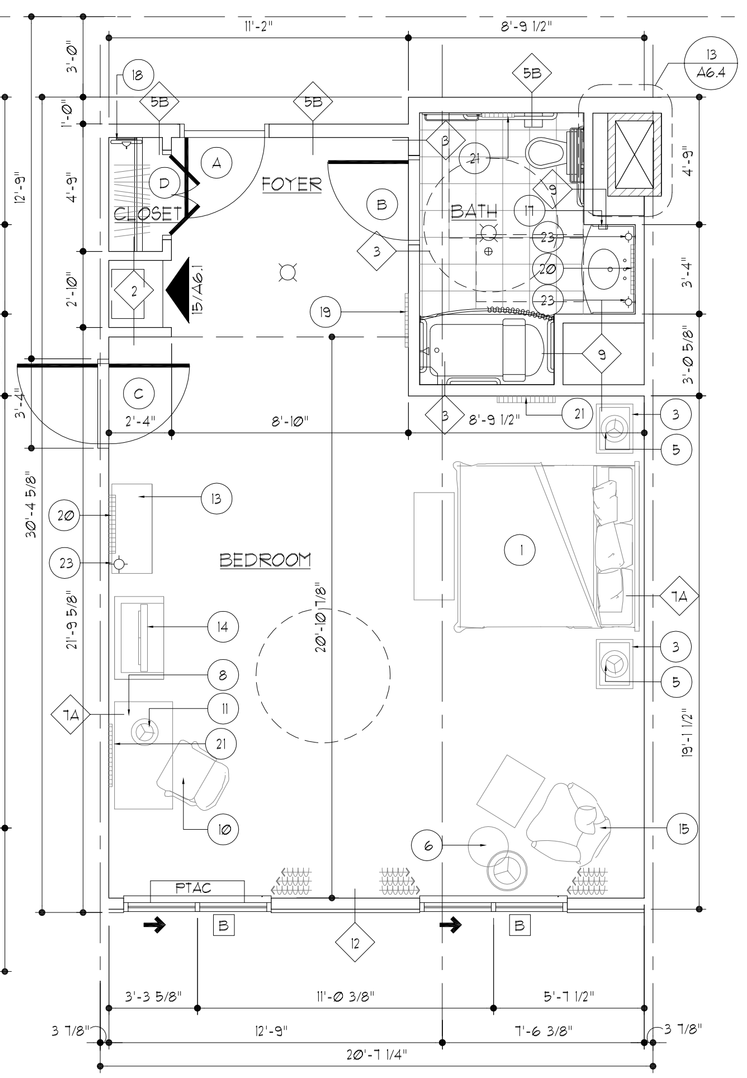

ACCESSIBLE KING W/ TUB
SEE 16/A5.1 FOR ADDITIONAL BATH INFO.

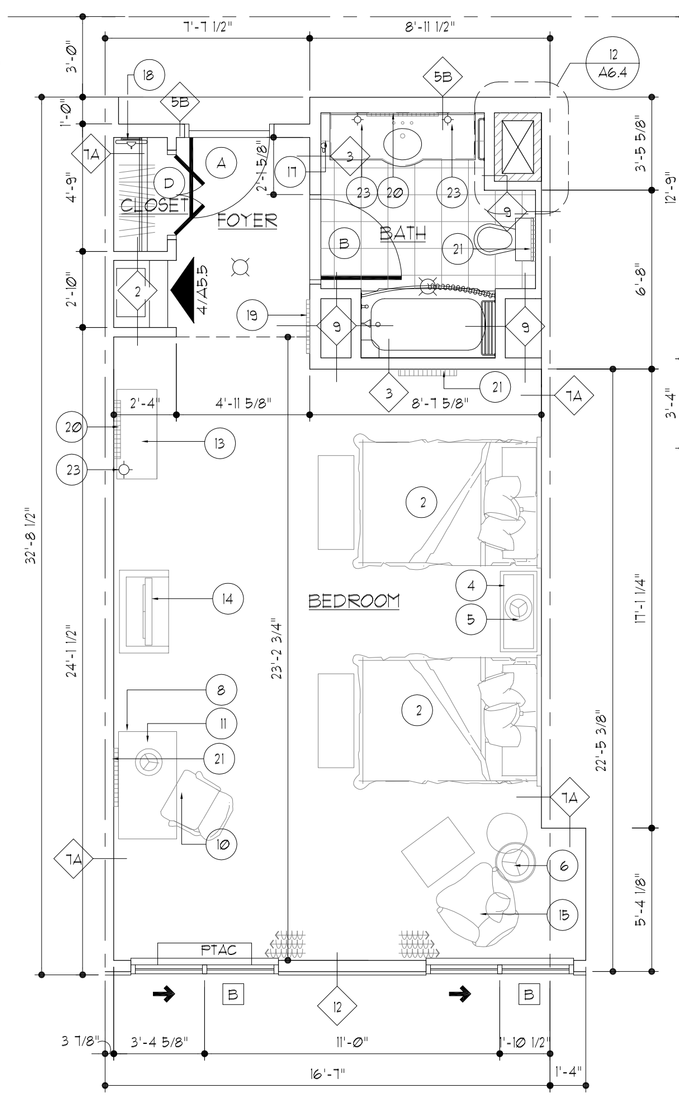

DOUBLE QUEEN PARLOR
SEE 21/A5.1 FOR ADDITIONAL BATH INFO.

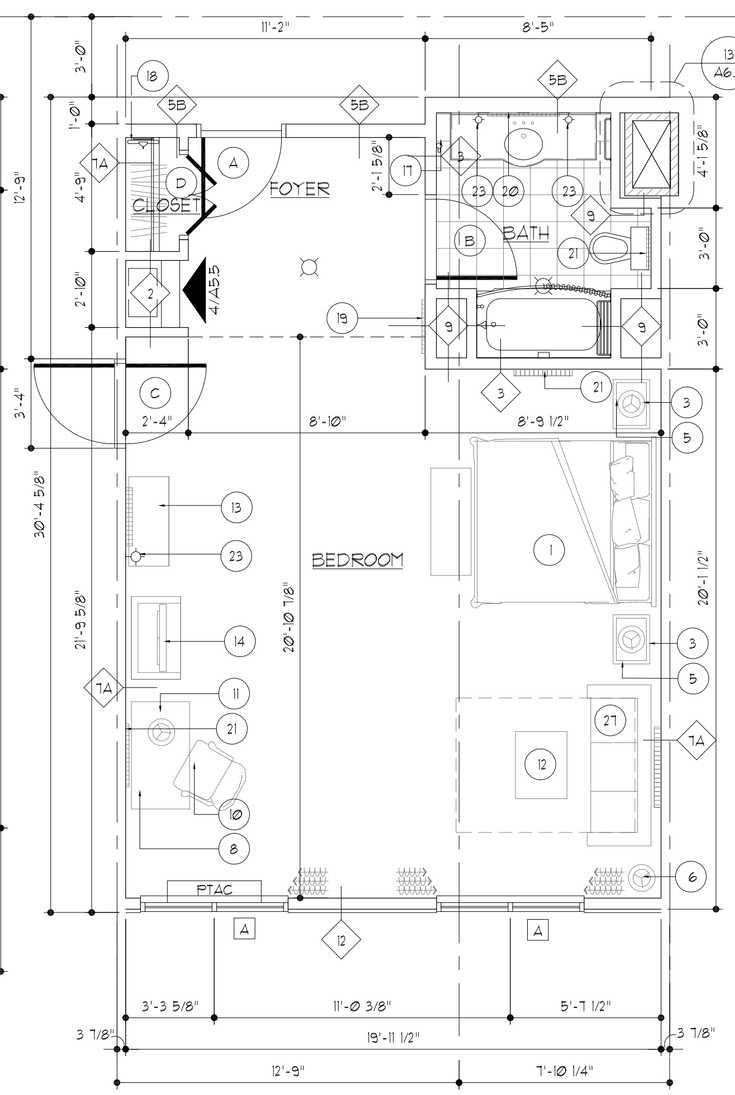

KING PARLOR
SEE 21/A5.1 FOR ADDITIONAL BATH INFO.

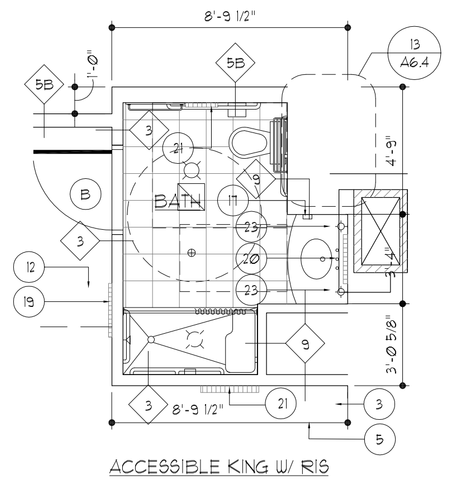

ACCESSIBLE KING W/ R16
SEE ACCESSIBLE KING W/ TUB FOR FURNITURE LAYOUT
SEE 16/A5.1 FOR ADDITIONAL BATH INFO.

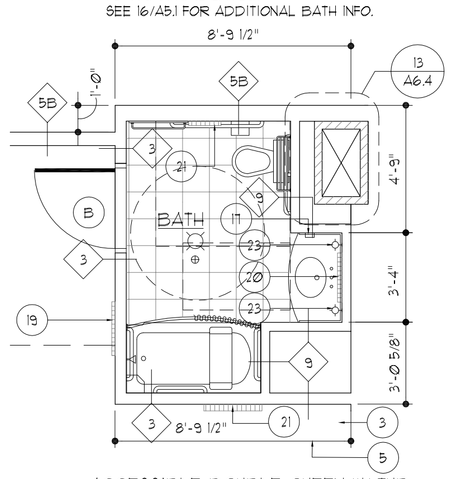

ACCESSIBLE DOUBLE QUEEN W/ TUB
SEE ACCESSIBLE DOUBLE QUEEN W/ R16 FOR FURNITURE LAYOUT
SEE 16/A5.1 FOR ADDITIONAL BATH INFO.

LARGE SCALE GUEST ROOM LAYOUTS

SCALE: 1/4" = 1'-0"

CALL NORTH
USED FOR ROOM FINISH SCHEDULE REFERENCE

LLW ARCHITECTS
803 S. MOUNT MORIAH
SUITE 100B
MEMPHIS, TN 38117
(901) 683-7175 p.
(901) 683-2385 f.
llw@llwarchitects.com

NO.	ISSUED	DATE
1	ISSUED	10/26/07

NO.	REVISIONS	DATE

COPYRIGHT BY LLW ARCHITECTS, INC
WARNING: UNAUTHORIZED COPYING VIOLATES U.S. COPYRIGHT LAWS AND WILL SUBJECT THE VIOLATOR TO LEGAL PROSECUTION.

CONSULTANTS
STRUCTURAL:
SK INTERNATIONAL, INC.
130 SOUTH MAIN STREET
HUNTSVILLE, AL 35811
(256) 852-3098

MECHANICAL:
CRABTREE ENGINEERING
726 S. MT. MORIAH
MEMPHIS, TN 38117
(901) 767-9898

PLUMBING:
CRABTREE ENGINEERING
726 S. MT. MORIAH
MEMPHIS, TN 38117
(901) 767-9898

ELECTRICAL:
CHS ENGINEERING
726 S. MT. MORIAH
MEMPHIS, TN 38117
(901) 767-2557

SEAL

Holiday Inn MILLENNIUM
BOSSIER CITY, LOUISIANA

SHEET NAME
LARGE SCALE GUEST ROOM LAYOUTS

DATE 10/26/07
DRAWN BY AP
CHECKED BY PEL
FILE NAME 1507-A401
SCALE AS NOTED
PROJECT NO. 1507
DRAWING

A4.1