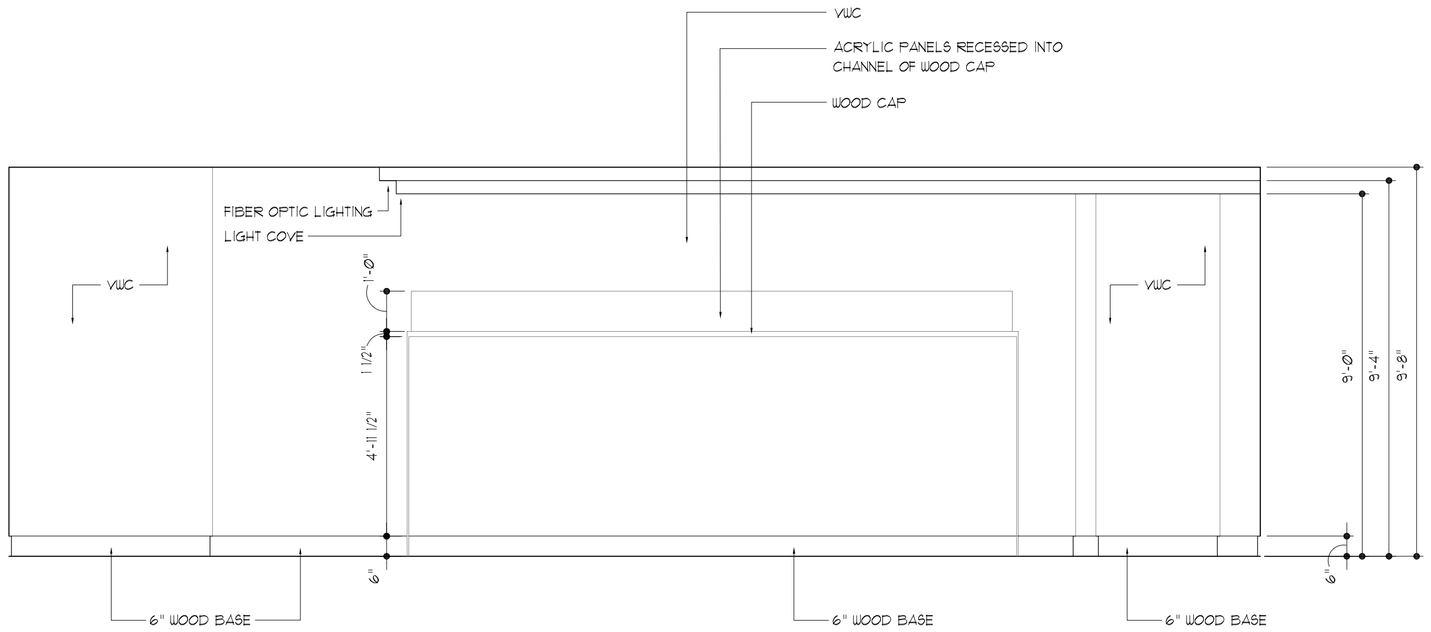

1 **Elevation Detail**
Restaurant
SCALE: 3/8" = 1'-0"

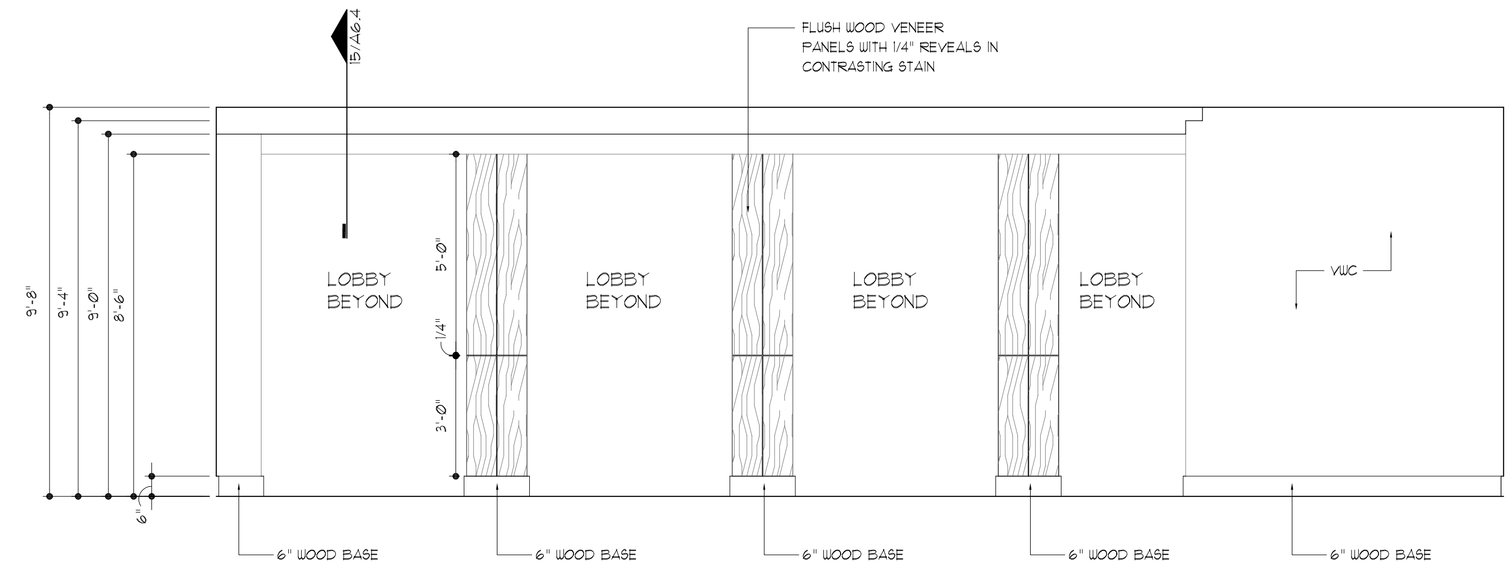

3 **Elevation Detail**
Restaurant
SCALE: 3/8" = 1'-0"

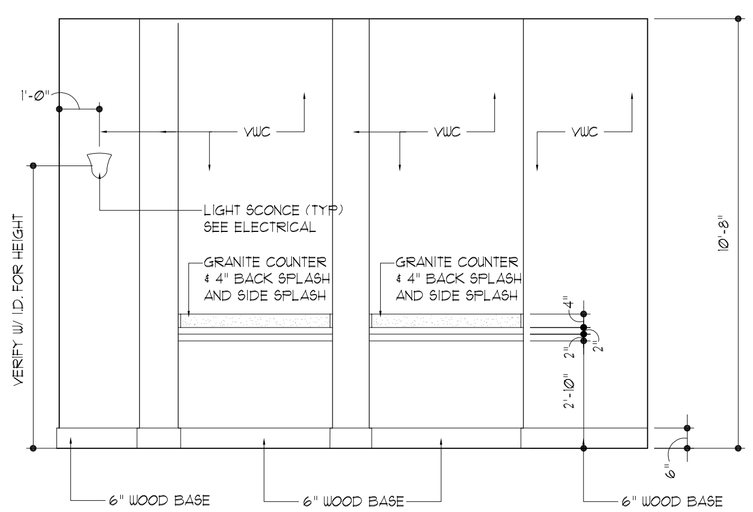

6 **Elevation Detail**
Business Center @ Ground Floor
SCALE: 3/8" = 1'-0"

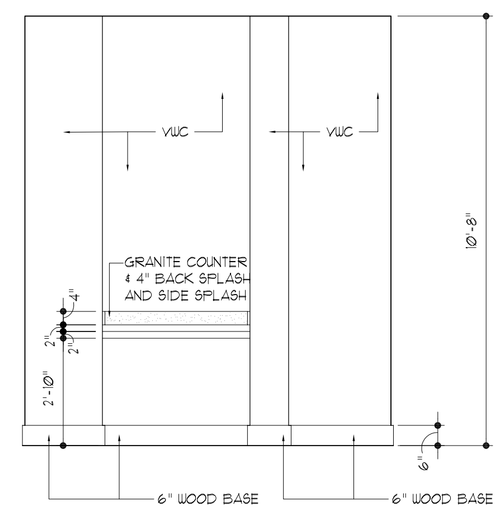

8 **Elevation Detail**
Business Center @ Ground Floor
SCALE: 3/8" = 1'-0"

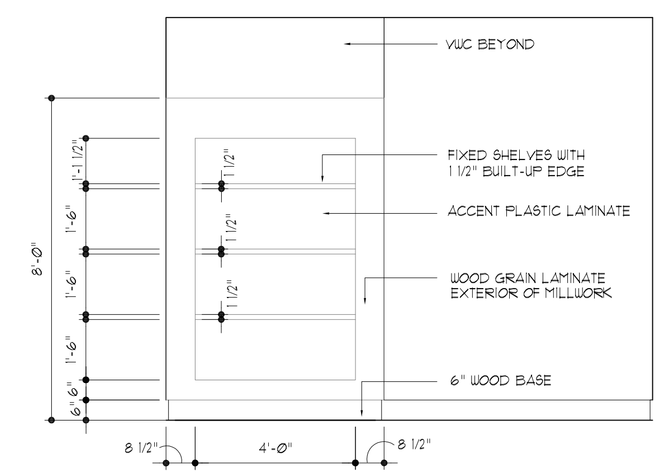

9 **Elevation Detail**
Sundries
SCALE: 3/8" = 1'-0"

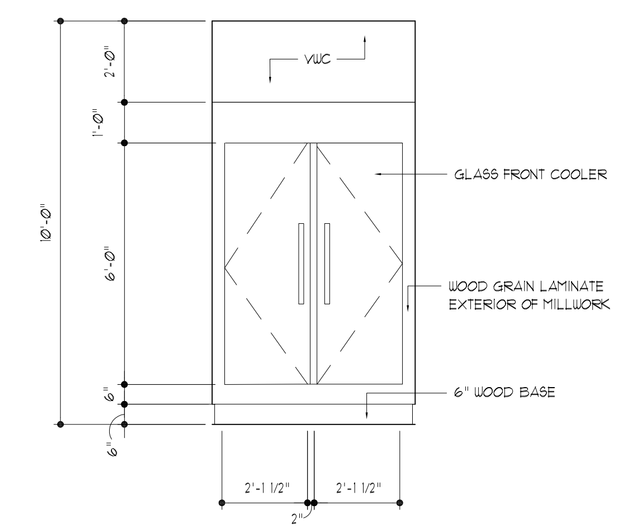

10 **Elevation Detail**
Sundries
SCALE: 3/8" = 1'-0"

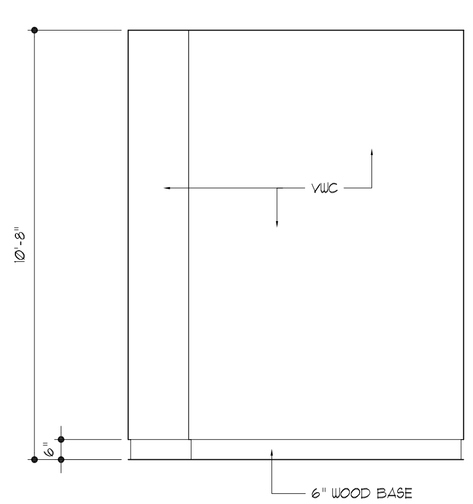

11 **Elevation Detail**
Sundries
SCALE: 3/8" - 1'-0"

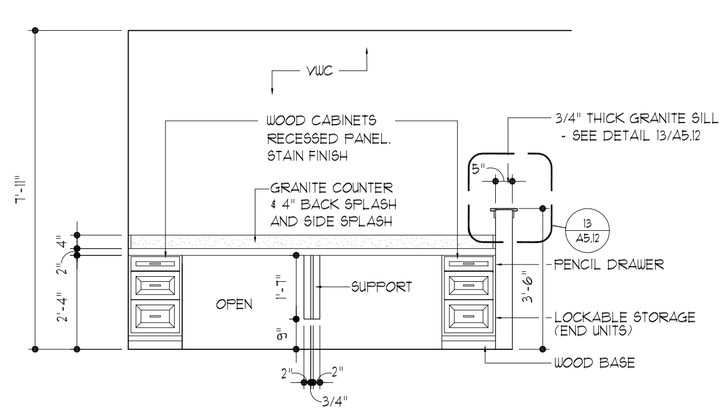

12 **Elevation Detail**
Business Center @ 6th Floor
SCALE: 3/8" = 1'-0"

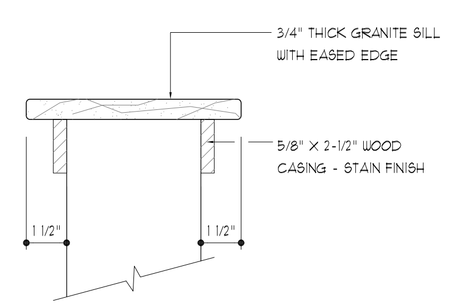

13 **Section Detail**
Top Cap @ 6th Floor Business Center
SCALE: 3" = 1'-0"

14 ***
Not Used
SCALE: NONE

ARCHITECTS
803 S. MOUNT MORIAH
SUITE 100B
MEMPHIS, TN 38117
(901) 683-7175 p.
(901) 683-2385 f.
llw@llwarchitects.com

NO.	ISSUED	DATE
1	ISSUED	10/26/07

NO.	REVISIONS	DATE

COPYRIGHT BY LLW ARCHITECTS, INC
WARNING: UNAUTHORIZED COPYING VIOLATES U.S. COPYRIGHT LAWS AND WILL SUBJECT THE VIOLATOR TO LEGAL PROSECUTION.

CONSULTANTS
STRUCTURAL:
SK INTERNATIONAL, INC.
130 SOUTH MAIN STREET
HUNTSVILLE, AL 35811
(256) 852-3098

MECHANICAL:
CRABTREE ENGINEERING
726 S. MT. MORIAH
MEMPHIS, TN 38117
(901) 767-9898

PLUMBING:
CRABTREE ENGINEERING
726 S. MT. MORIAH
MEMPHIS, TN 38117
(901) 767-9898

ELECTRICAL:
CHS ENGINEERING
726 S. MT. MORIAH
MEMPHIS, TN 38117
(901) 767-2557

SEAL

Holiday Inn MILLENNIUM
BOSSIER CITY, LOUISIANA

SHEET NAME
INTERIOR ELEVATIONS

DATE 10/26/07
DRAWN BY KDB
CHECKED BY PEL
FILE NAME 1507-A512
SCALE AS NOTED
PROJECT NO. 1507
DRAWING A5.12