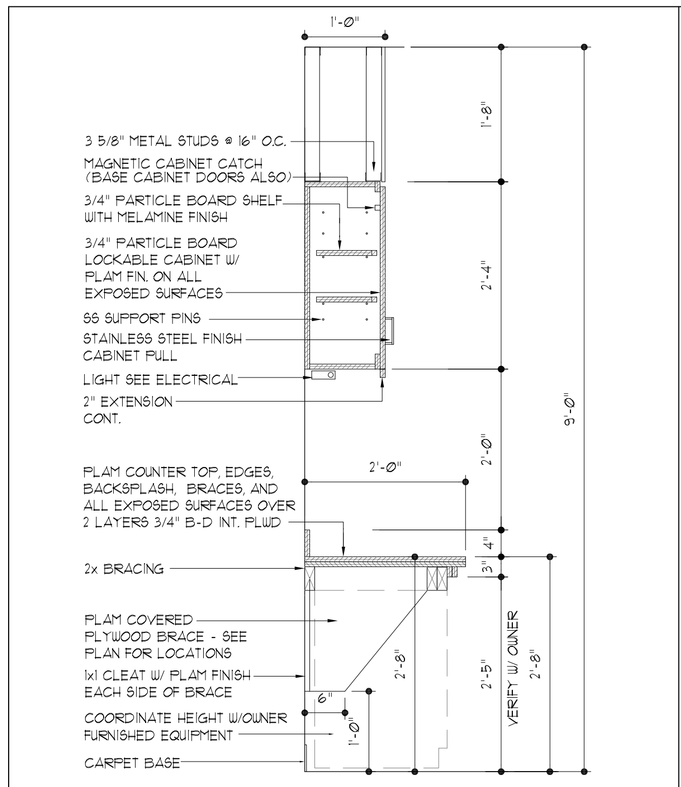

1 Section Detail
Work Area Cabinet
SCALE: 3/4" = 1'-0"

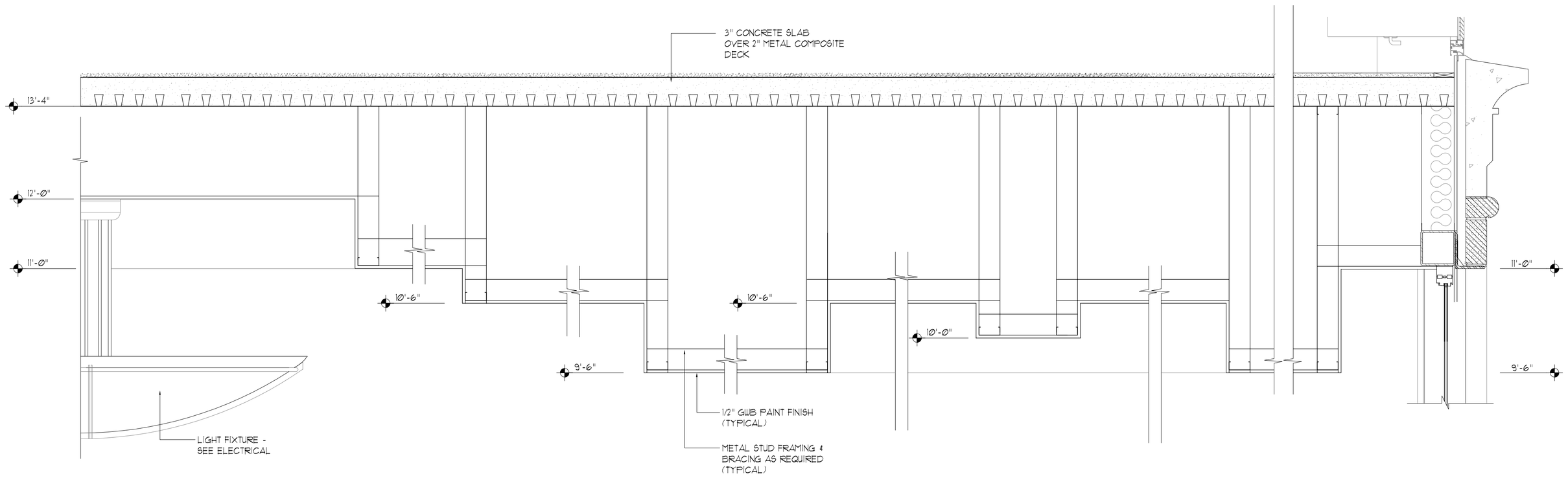

2 Section Detail
Furr Down @ Lobby Area
SCALE: 1" = 1'-0"

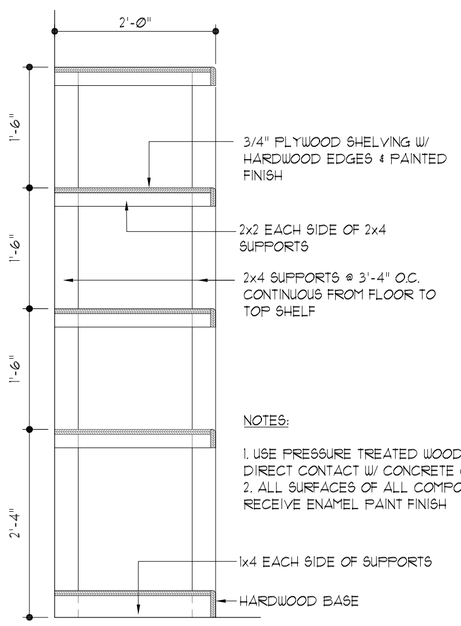

6 Section Detail
Linen Shelving
SCALE: 3/4" = 1'-0"

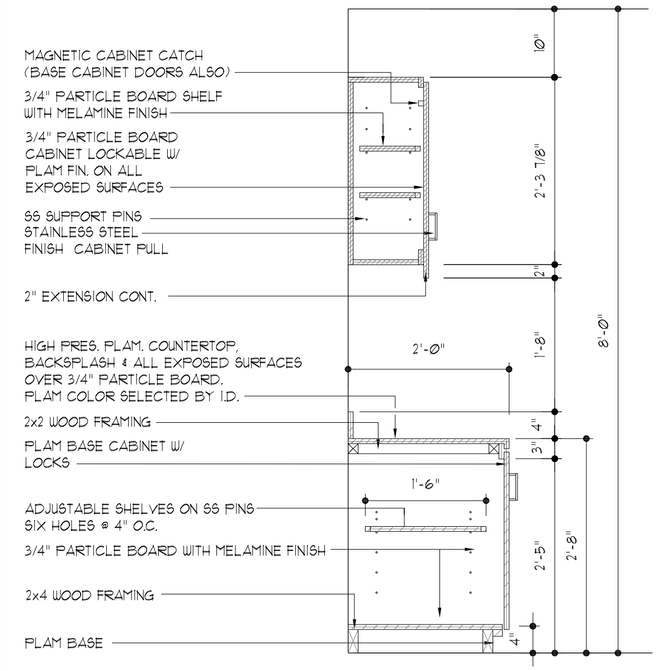

7 Section Detail
Housekeeping Desk
SCALE: 3/4" = 1'-0"

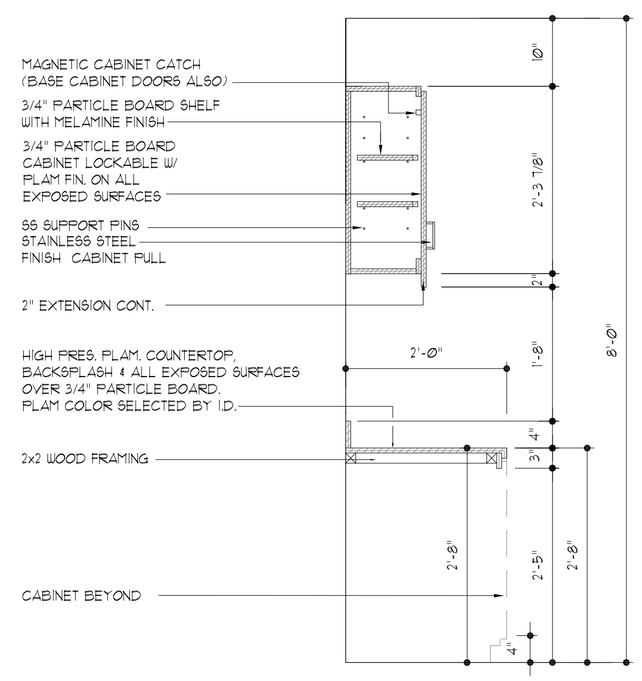

8 Section Detail
Housekeeping Desk
SCALE: 3/4" = 1'-0"

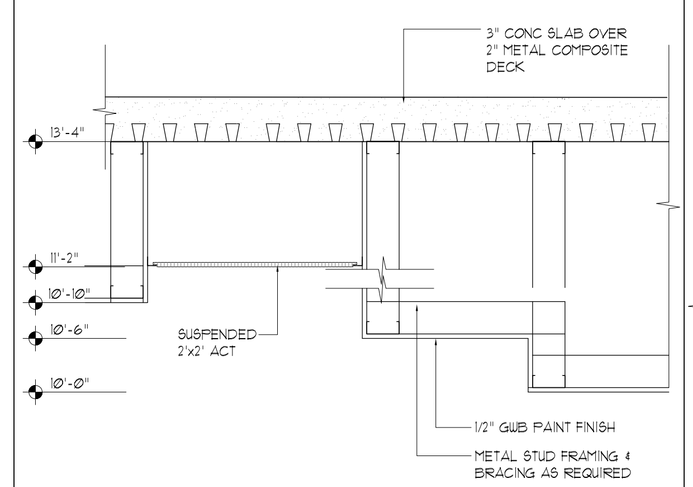

9 Section Detail
Furr Down @ Breakout Room
SCALE: 1" = 1'-0"

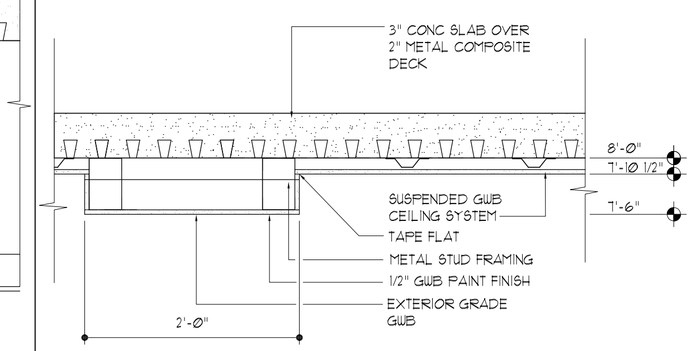

10 Section Detail
Furr Down @ Corridor 2-5 Fire
SCALE: 1" = 1'-0"

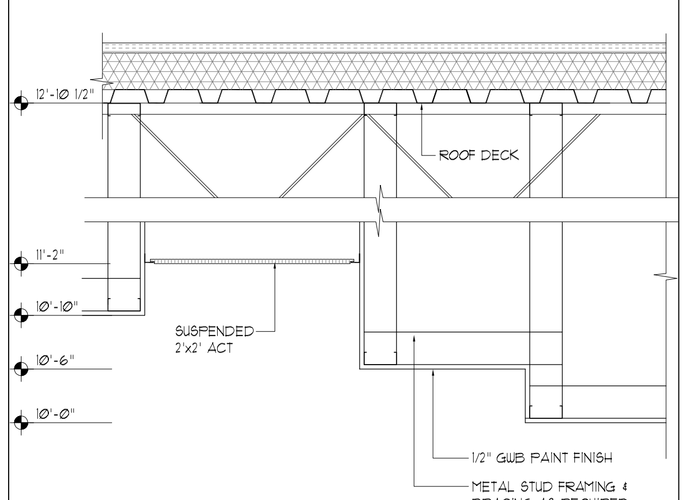

11 Section Detail
Furr Down @ Meeting Rooms #1, 3
SCALE: 1" = 1'-0"

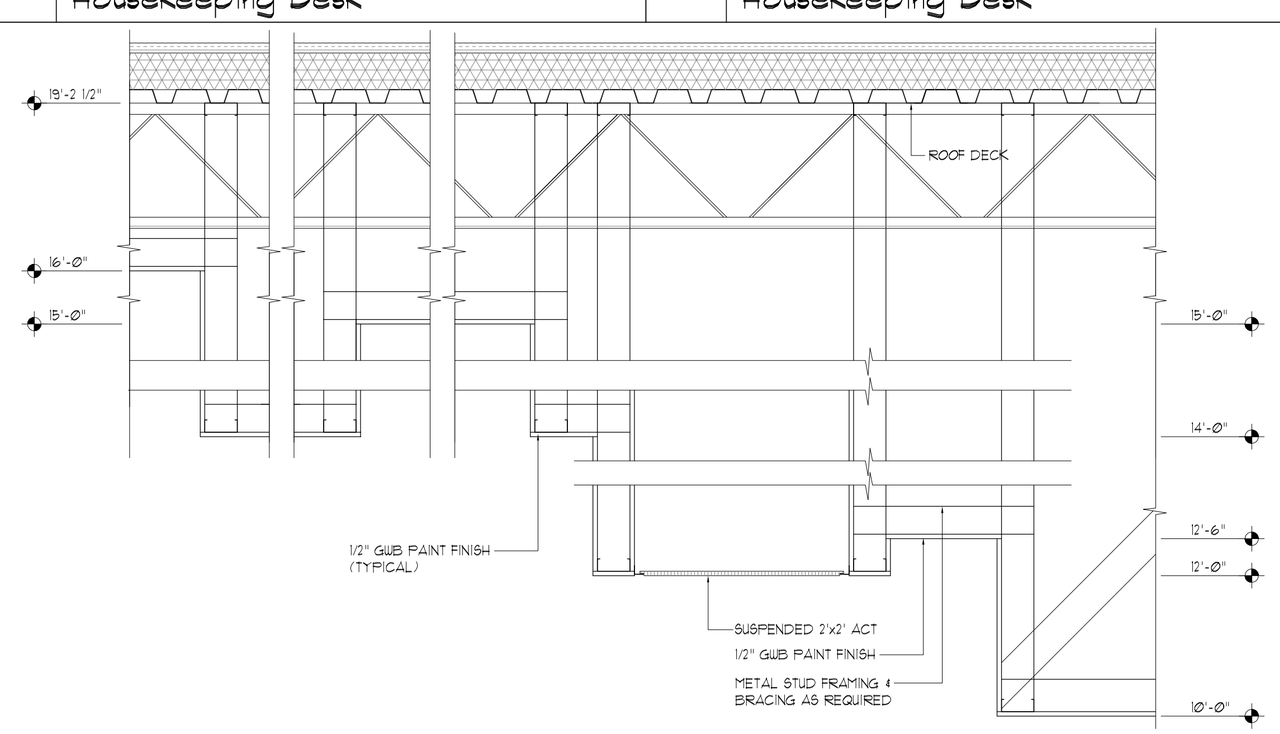

12 Section Detail
Furr Down @ Meeting Room #2
SCALE: 1" = 1'-0"

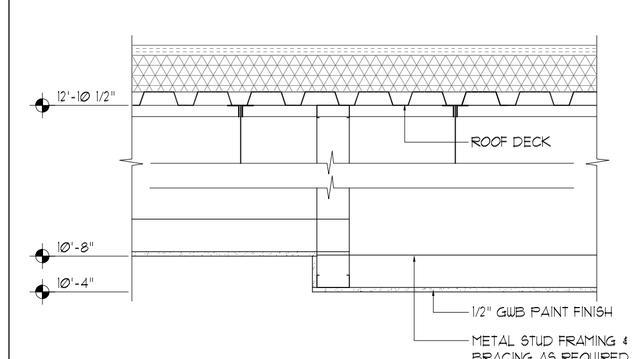

14 Section Detail
Furr @ Meeting & Breakout Prefunction
SCALE: 1" = 1'-0"

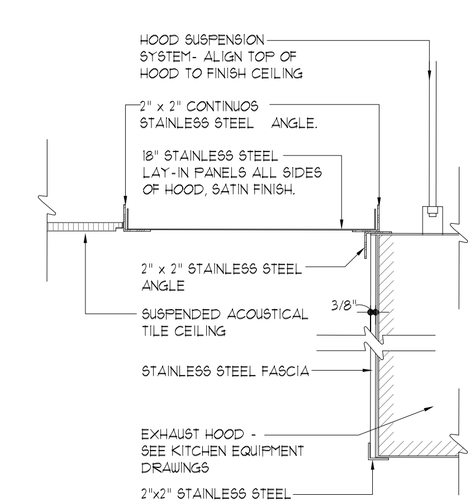

15 Section Detail
Kitchen Hood Fascia
SCALE: 1 1/2" = 1'-0"

LIW ARCHITECTS

803 S. MOUNT MORIAH
SUITE 100B
MEMPHIS, TN 38117
(901) 683-7175 p.
(901) 683-2385 f.
liw@liwarchitects.com

NO.	ISSUED	DATE
1	ISSUED	10/26/07

NO.	REVISIONS	DATE

COPYRIGHT BY LIW ARCHITECTS, INC
WARNING: UNAUTHORIZED COPYING VIOLATES U.S. COPYRIGHT LAWS AND WILL SUBJECT THE VIOLATOR TO LEGAL PROSECUTION.

CONSULTANTS
STRUCTURAL:
SK INTERNATIONAL, INC.
130 SOUTH MAIN STREET
HUNTSVILLE, AL 35811
(256) 852-3098

MECHANICAL:
CRABTREE ENGINEERING
726 S. MT. MORIAH
MEMPHIS, TN 38117
(901) 767-9898

PLUMBING:
CRABTREE ENGINEERING
726 S. MT. MORIAH
MEMPHIS, TN 38117
(901) 767-9898

ELECTRICAL:
CHS ENGINEERING
726 S. MT. MORIAH
MEMPHIS, TN 38117
(901) 767-2557

SEAL

Holiday Inn MILLENNIUM
BOSSIER CITY, LOUISIANA

SHEET NAME
TYPICAL INTERIOR CONSTRUCTION DETAILS

DATE 10/26/07
DRAWN BY JW
CHECKED BY PEL
FILE NAME 1507-A63
SCALE AS NOTED
PROJECT NO. 1507
DRAWING

A6.3