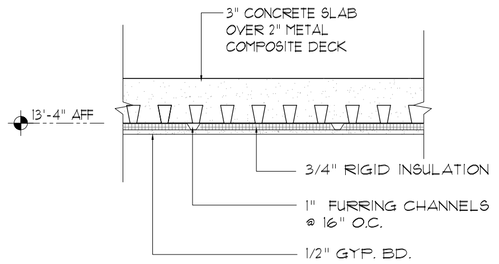

1 Section Detail SCALE: 1" = 1'-0"
Ceiling @ Dryers

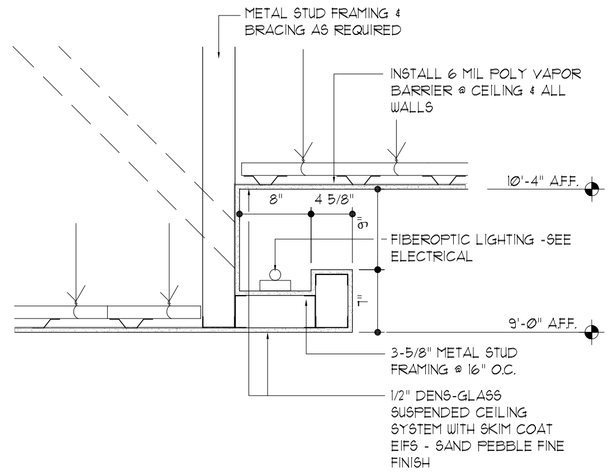

2 Section Detail SCALE: 1" = 1'-0"
Light Cove @ Pool

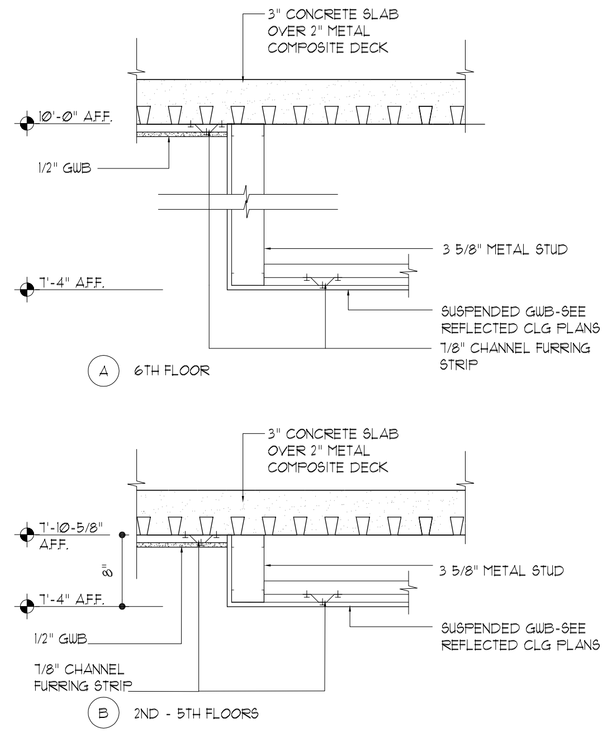

3 Section Detail SCALE: 1" = 1'-0"
Furr Down @ Guestroom Foyer/Bedroom

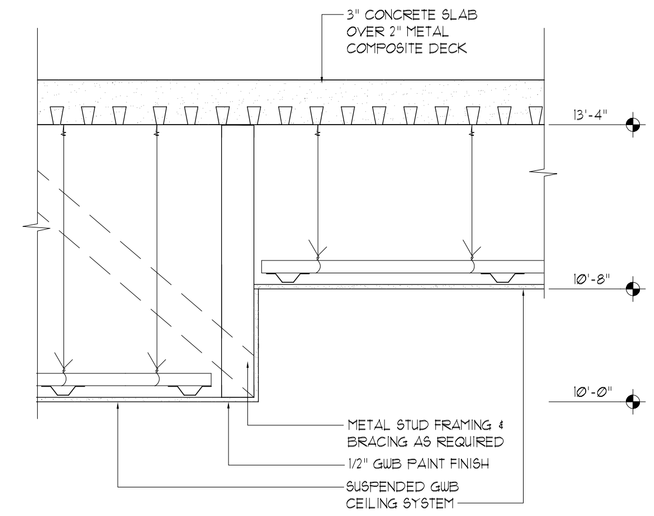

4 Section Detail SCALE: 1" = 1'-0"
Furr Down @ Lobby, Corridor, Food/ Bev.

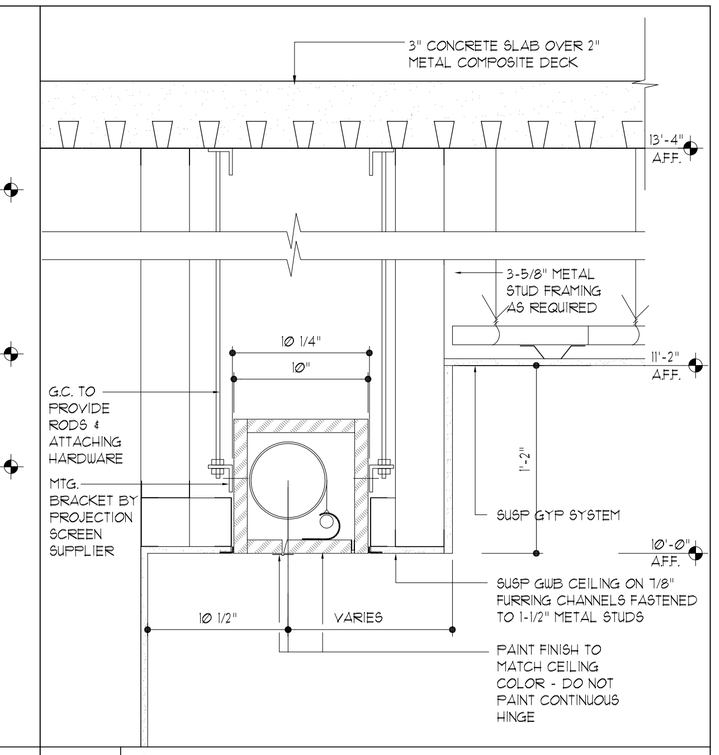

5 Section Detail SCALE: 1 1/2" = 1'-0"
Projection Screen

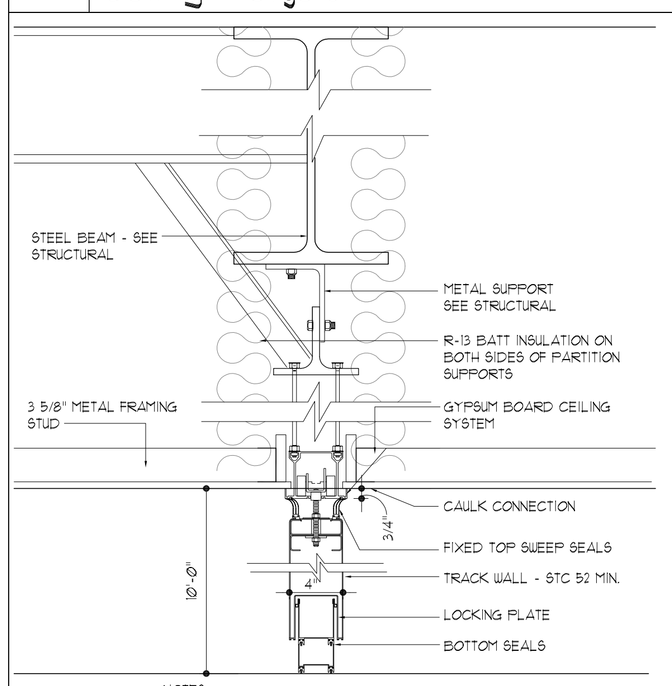

NOTES:
1. PROVIDE SOUND ATTENUATION INSULATION ON BOTH SIDES AND ACROSS THE TOP OF FURR DOWN AT OPERABLE PARTITION.
2. INSTALL CUSTOM VWC ON PANELS AND DOORS AT FACTORY

6 Section Detail SCALE: 1" = 1'-0"
Movable Partition

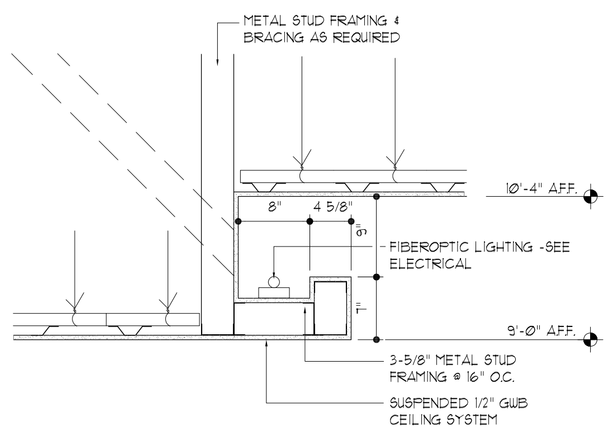

7 Section Detail SCALE: 1" = 1'-0"
Light Cove @ Exercise & Restaurant

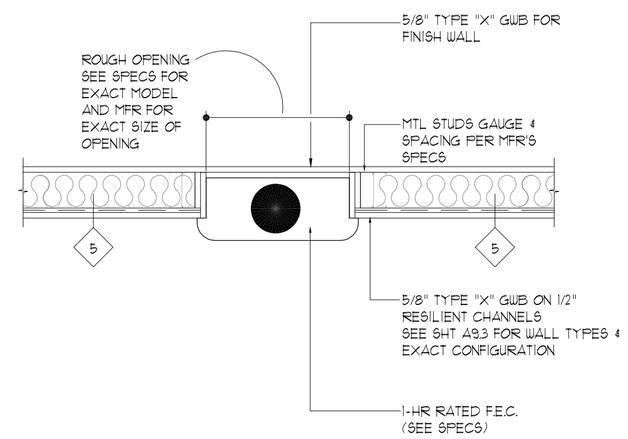

8 Section Detail SCALE: 1" = 1'-0"
Fire Extinguisher Cabinet (1 Hr. Rated)

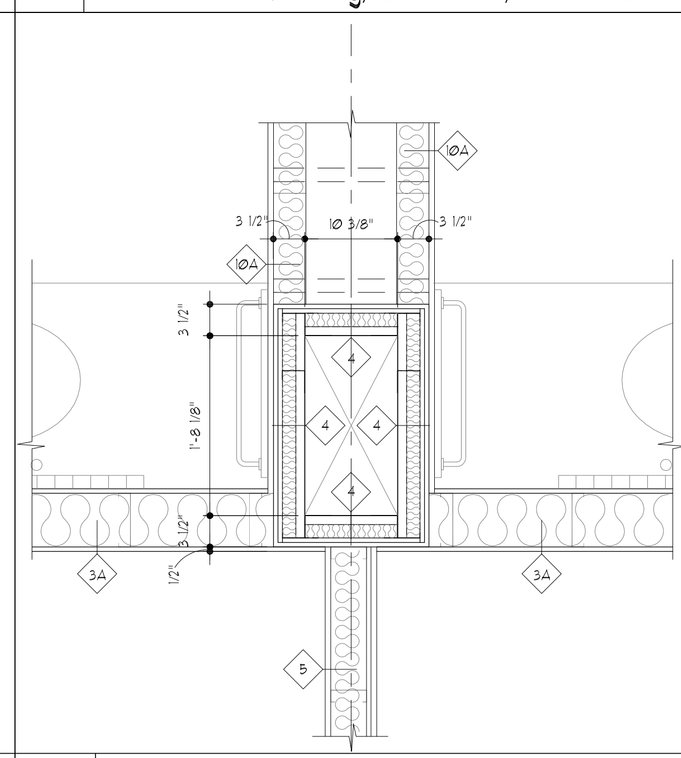

9 Section Detail SCALE: 1" = 1'-0"
Bath Exhaust @ D.Q & D.Q

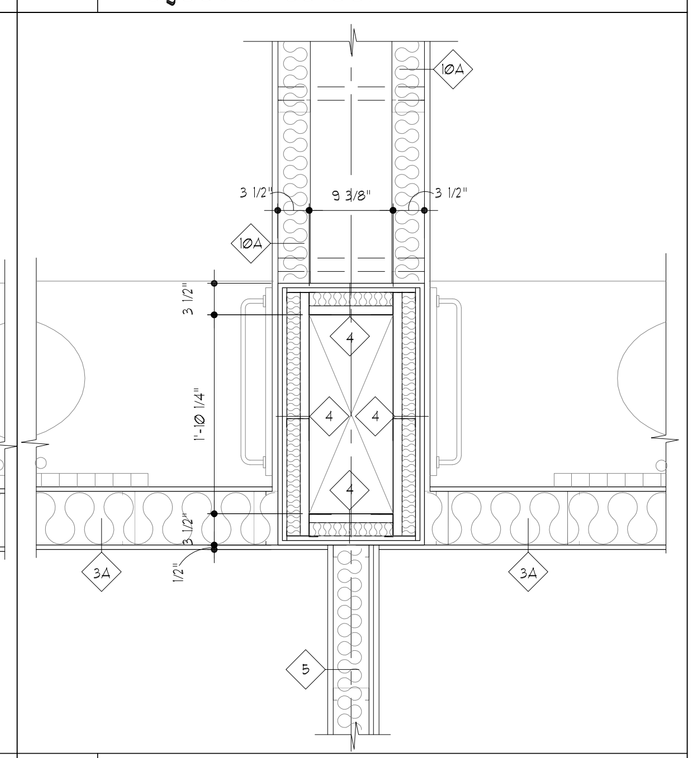

10 Section Detail SCALE: 1" = 1'-0"
Bath Exhaust @ King 311-511 & 313-513

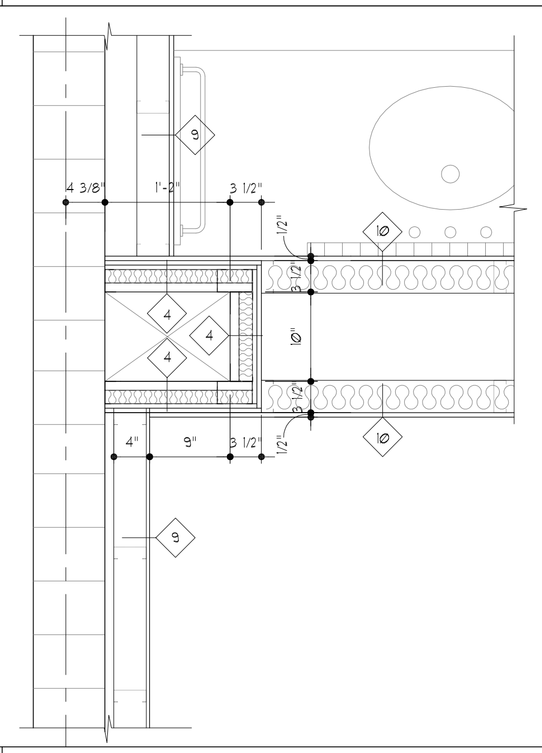

11 Section Detail SCALE: 1" = 1'-0"
Bath Exhaust @ King Corner

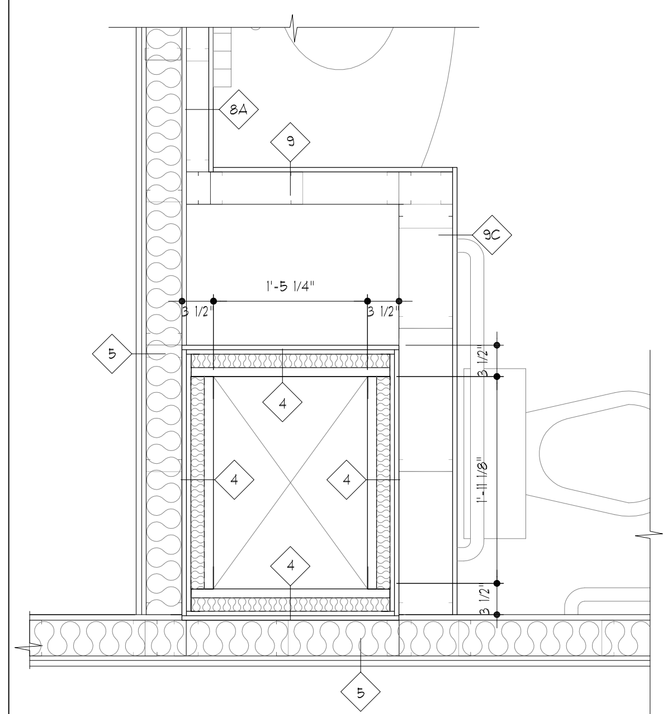

12 Section Detail SCALE: 1" = 1'-0"
Bath Exhaust @ Accessible DQ & DQ. P

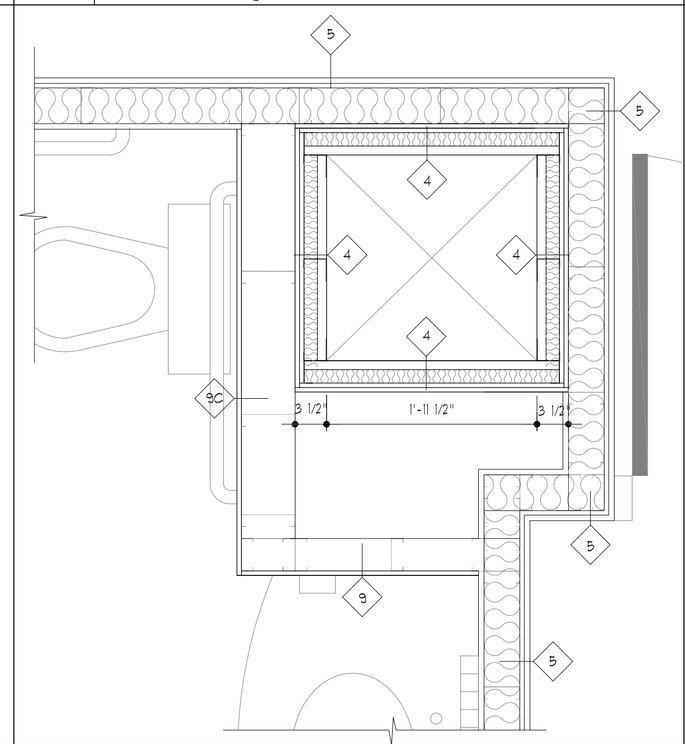

13 Section Detail SCALE: 1" = 1'-0"
Bath Exhaust @ Accessible King & K. P

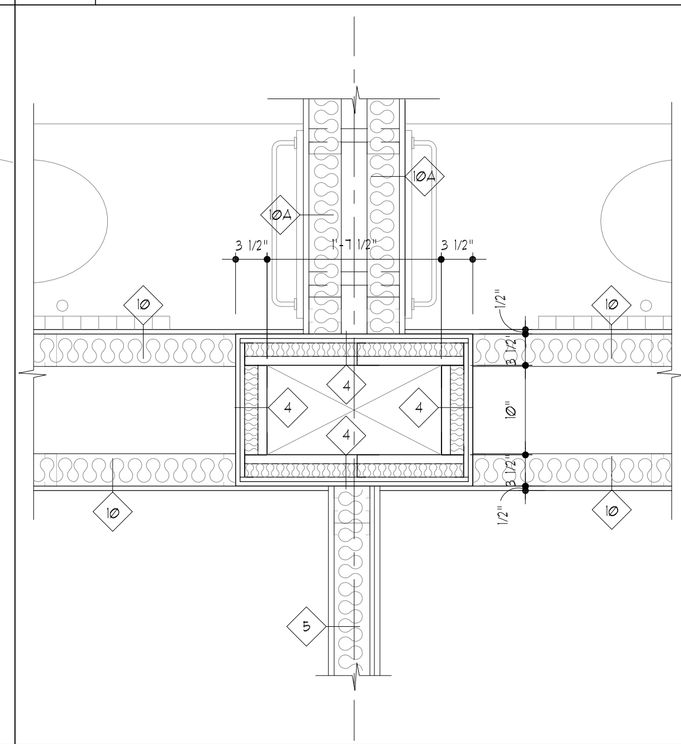

14 Section Detail SCALE: 1" = 1'-0"
Bath Exhaust @ King w/S & King w/S

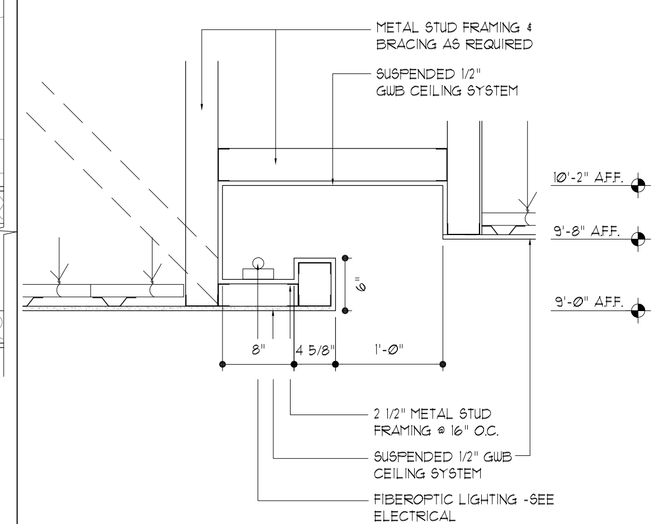

15 Section Detail SCALE: 1" = 1'-0"
Light Cove @ Food & Beverage

LLW ARCHITECTS
803 S. MOUNT MORIAH
SUITE 100B
MEMPHIS, TN 38117
(901) 683-7175 p.
(901) 683-2385 f.
llw@llwarchitects.com

NO.	ISSUED	DATE
1	ISSUED	10/26/07

NO.	REVISIONS	DATE

COPYRIGHT BY LLW ARCHITECTS, INC
WARNING: UNAUTHORIZED COPYING VIOLATES U.S. COPYRIGHT LAWS AND WILL SUBJECT THE VIOLATOR TO LEGAL PROSECUTION.

CONSULTANTS
STRUCTURAL:
SK INTERNATIONAL, INC.
130 SOUTH MAIN STREET
HUNTSVILLE, AL 35811
(256) 852-3098

MECHANICAL:
CRABTREE ENGINEERING
726 S. MT. MORIAH
MEMPHIS, TN 38117
(901) 767-9898

PLUMBING:
CRABTREE ENGINEERING
726 S. MT. MORIAH
MEMPHIS, TN 38117
(901) 767-9898

ELECTRICAL:
CHS ENGINEERING
726 S. MT. MORIAH
MEMPHIS, TN 38117
(901) 767-2557

SEAL

Holiday Inn MILLENNIUM
BOSSIER CITY, LOUISIANA

SHEET NAME
TYPICAL INTERIOR CONSTRUCTION DETAILS

DATE 10/26/07
DRAWN BY JW
CHECKED BY PEL
FILE NAME 1507-A64
SCALE AS NOTED
PROJECT NO. 1507
DRAWING A6.4