1 Not Used SCALE:
**

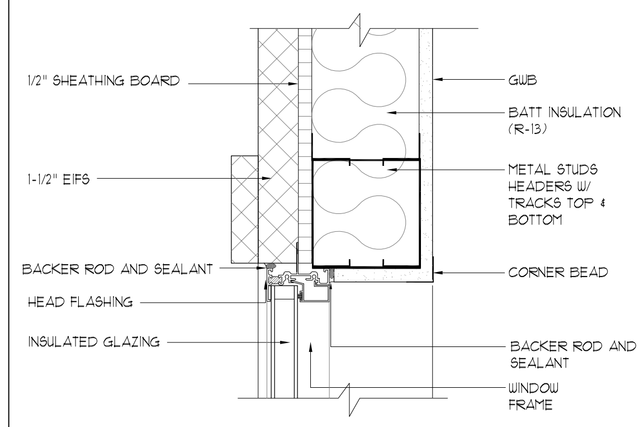

2 Section Detail SCALE: 3" = 1'-0"
Head @ EIFS Window

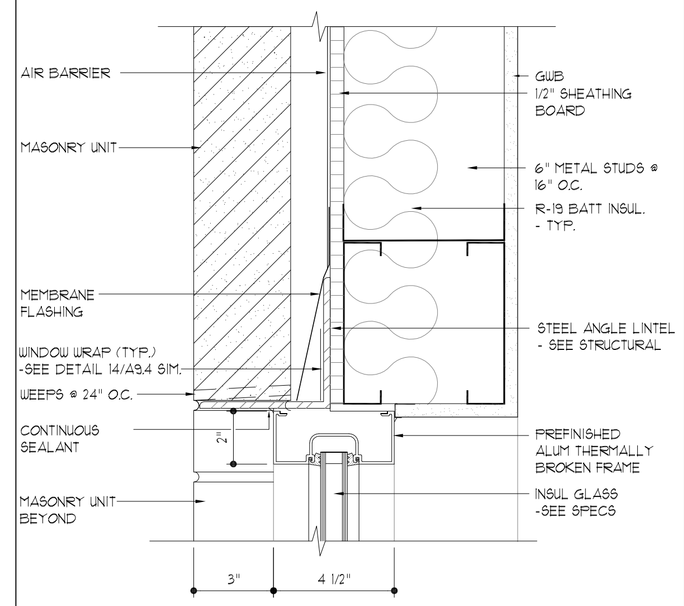

3 Section Detail SCALE: 3" = 1'-0"
Head @ Aluminum Storefront Window

4 Not Used SCALE:
**

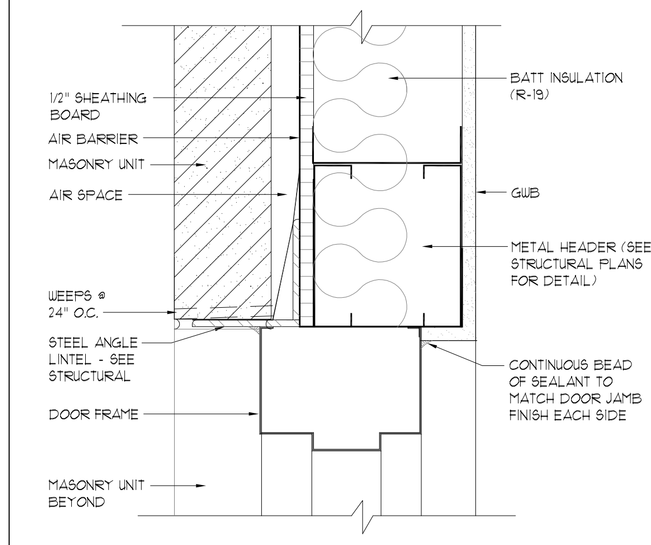

5 Section Detail SCALE: 3" = 1'-0"
Hollow Metal Head @ Stud Wall

6 Not Used SCALE:
**

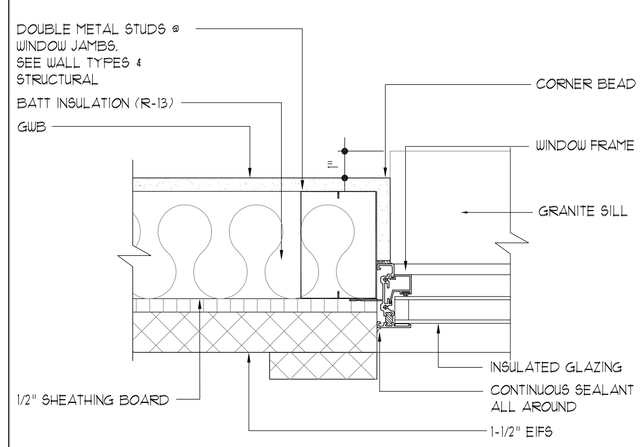

7 Section Detail SCALE: 3" = 1'-0"
Jamb @ EIFS Window

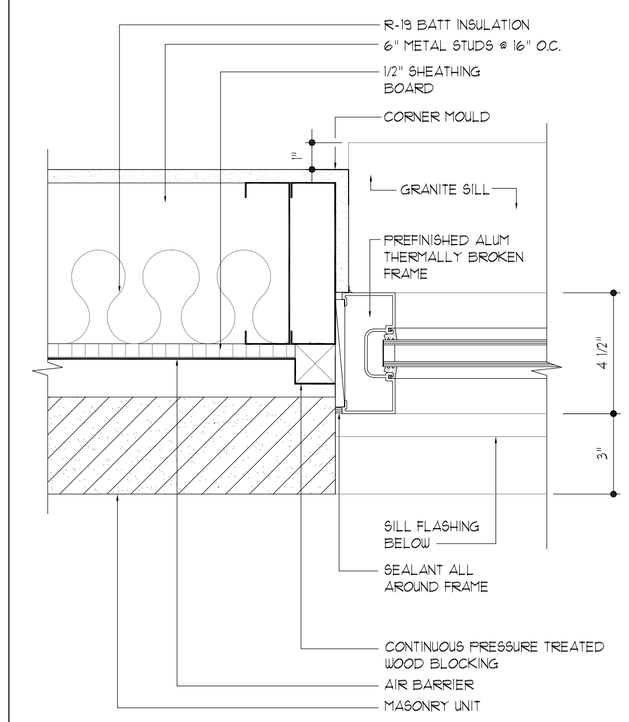

8 Section Detail SCALE: 3" = 1'-0"
Jamb @ Aluminum Storefront Window

9 Not Used SCALE:
**

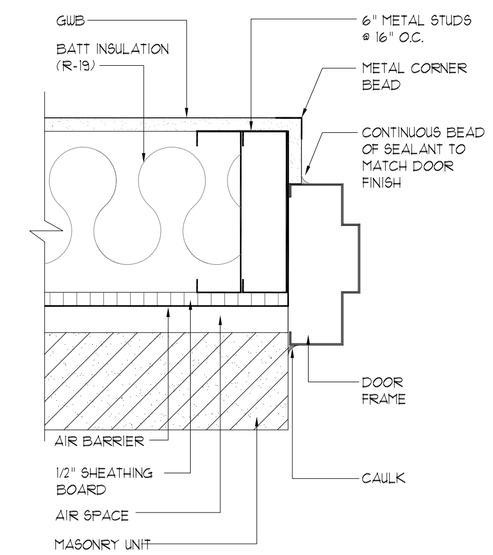

10 Section Detail SCALE: 3" = 1'-0"
Hollow Metal Jamb @ Stud Wall

11 Not Used SCALE:
**

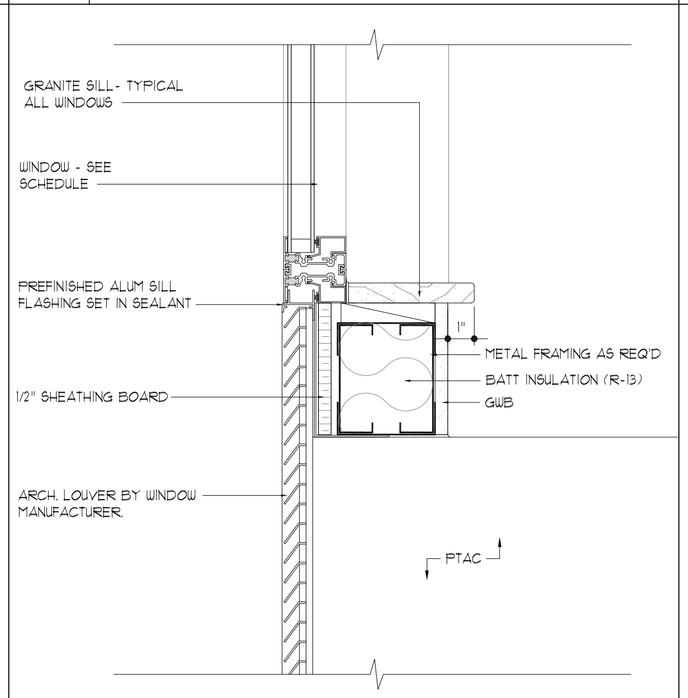

12 Section Detail SCALE: 3" = 1'-0"
Sill @ EIFS Window

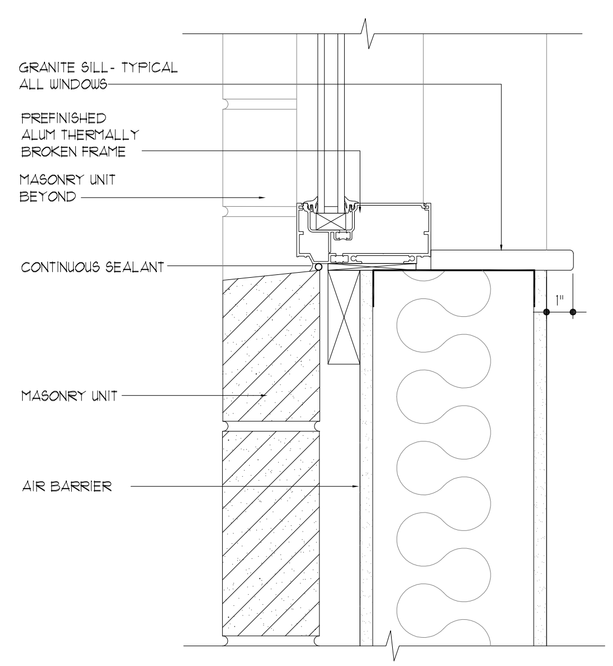

13 Section Detail SCALE: 3" = 1'-0"
Sill @ Aluminum Storefront Window

14 Not Used SCALE:
**

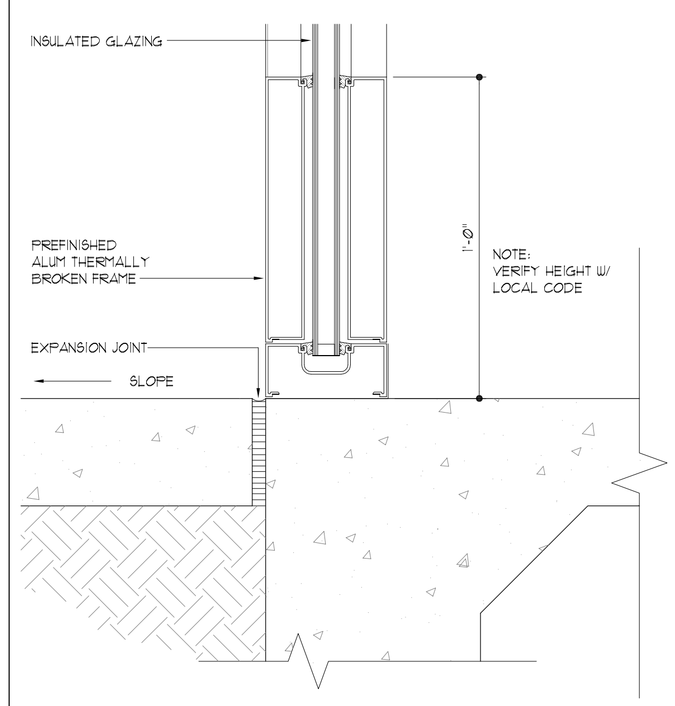

15 Section Detail SCALE: 3" = 1'-0"
Sill @ Aluminum Storefront

LLW ARCHITECTS
803 S. MOUNT MORIAH
SUITE 100B
MEMPHIS, TN 38117
(901) 683-7175 p.
(901) 683-2385 f.
llw@llwarchitects.com

NO.	ISSUED	DATE
1	ISSUED	10/26/07

NO.	REVISIONS	DATE

COPYRIGHT BY LLW ARCHITECTS, INC
WARNING: UNAUTHORIZED COPYING VIOLATES U.S. COPYRIGHT LAWS AND WILL SUBJECT THE VIOLATOR TO LEGAL PROSECUTION.

CONSULTANTS
STRUCTURAL:
SK INTERNATIONAL, INC.
130 SOUTH MAIN STREET
HUNTSVILLE, AL 35811
(256) 852-3098

MECHANICAL:
CRABTREE ENGINEERING
726 S. MT. MORIAH
MEMPHIS, TN 38117
(901) 767-9898

PLUMBING:
CRABTREE ENGINEERING
726 S. MT. MORIAH
MEMPHIS, TN 38117
(901) 767-9898

ELECTRICAL:
CHS ENGINEERING
726 S. MT. MORIAH
MEMPHIS, TN 38117
(901) 767-2557

SEAL

Holiday Inn MILLENNIUM
BOSSIER CITY, LOUISIANA

SHEET NAME
EXTERIOR DOOR AND WINDOW DETAILS

DATE 10/26/07
DRAWN BY JW
CHECKED BY PEL
FILE NAME 1507-A606
SCALE AS NOTED
PROJECT NO. 1507
DRAWING

A6.6