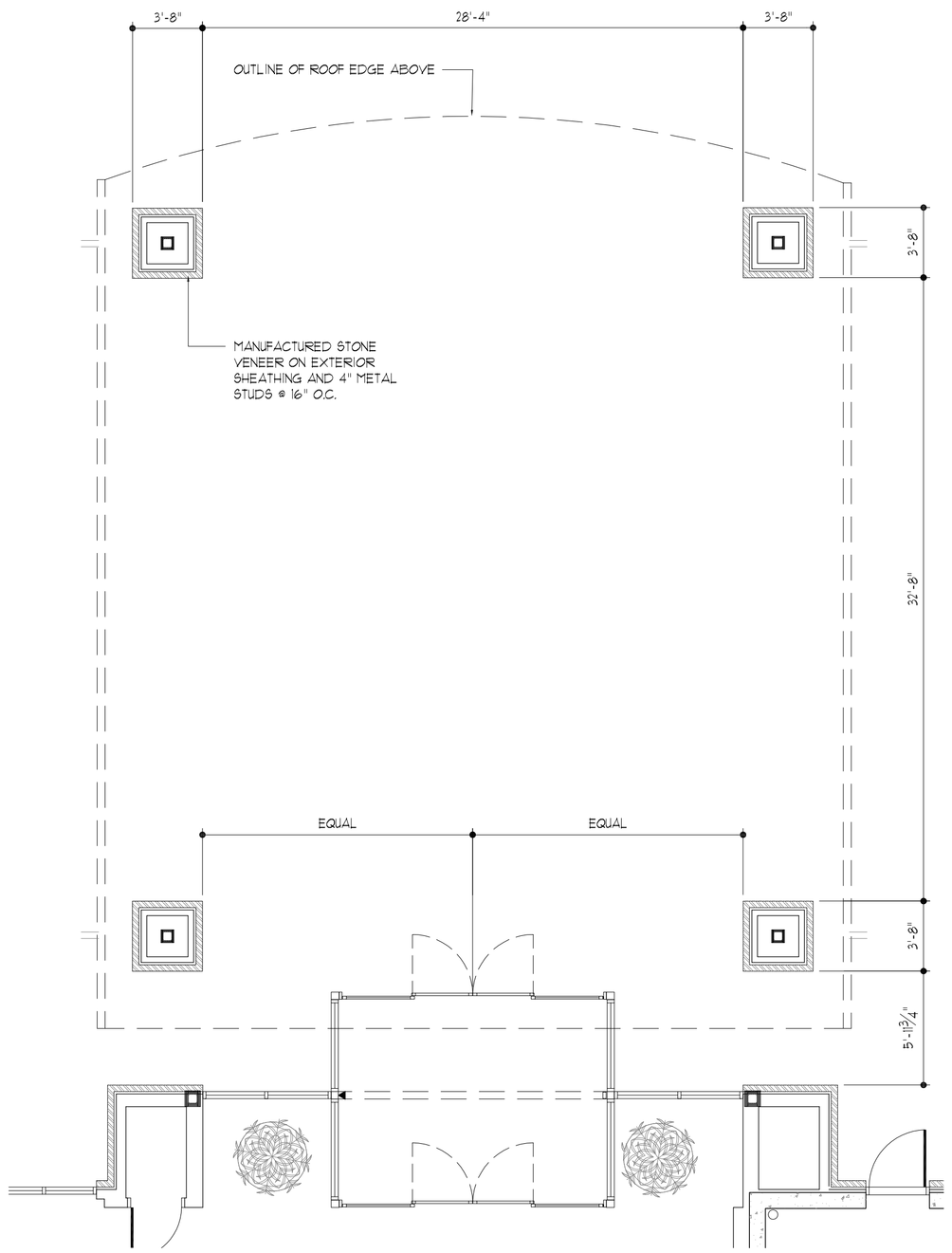

6 **Plan Detail**
Canopy
SCALE: 3/16"=1'-0"

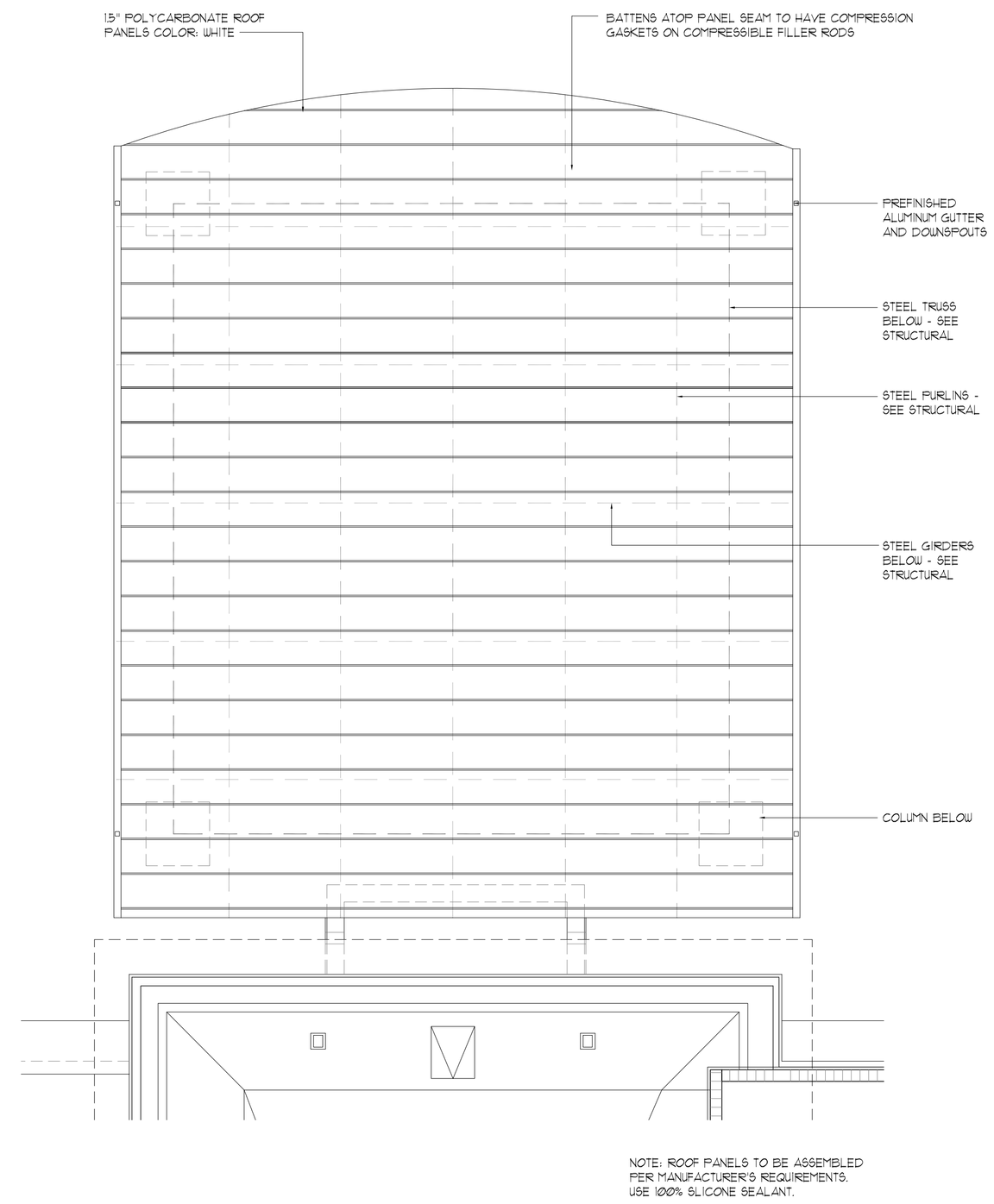

8 **Plan Detail**
Canopy Roof
SCALE: 3/16"=1'-0"

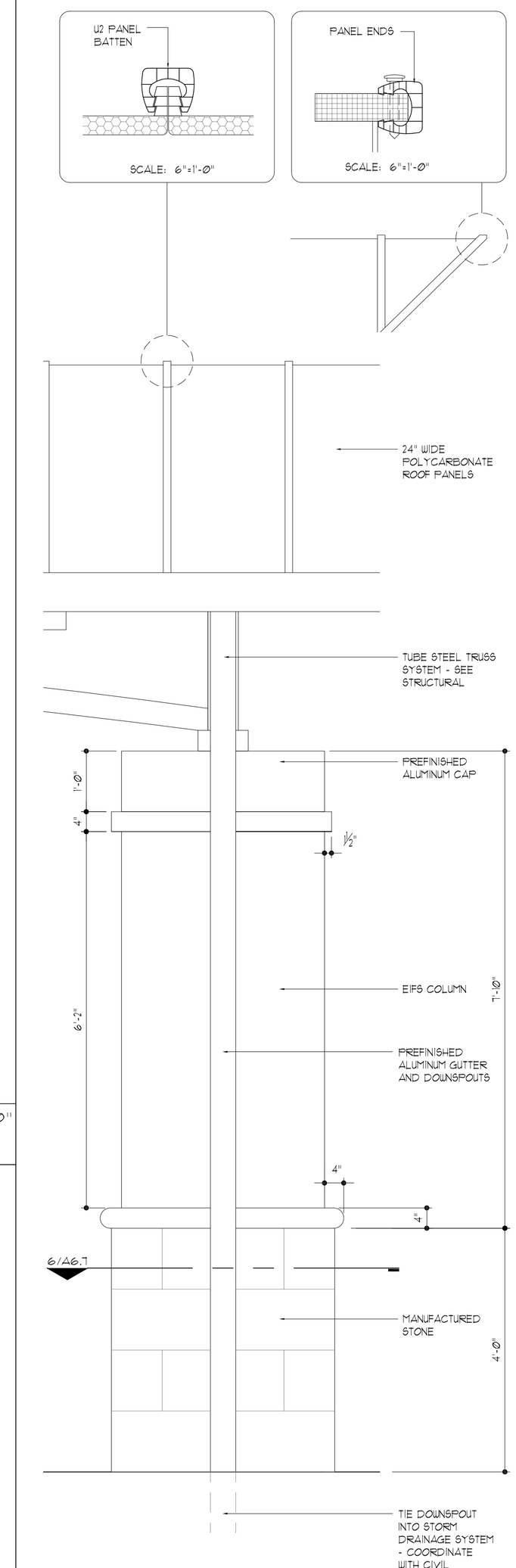

15 **Section Detail**
Canopy Column
SCALE: 3/4"=1'-0"

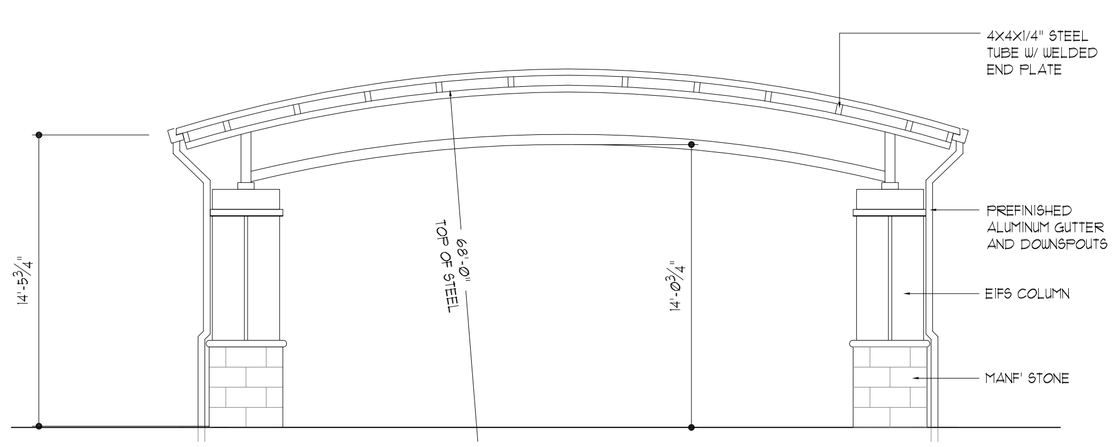

11 **Elevation Detail**
Canopy Front
SCALE: 3/16" = 1'-0"

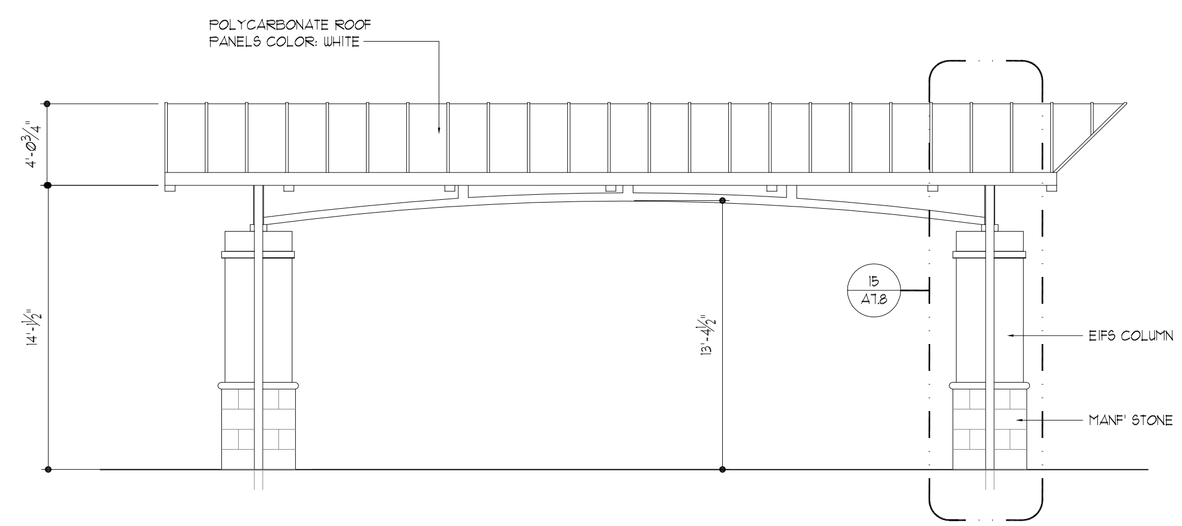

13 **Elevation Detail**
Canopy Side
SCALE: 3/16"=1'-0"

ARCHITECTS
803 S. MOUNT MORIAH
SUITE 100B
MEMPHIS, TN 38117
(901) 683-7175 p.
(901) 683-2385 f.
llw@llwarchitects.com

NO.	ISSUED	DATE
1	ISSUED	10/26/07

NO.	REVISIONS	DATE

COPYRIGHT BY LLW ARCHITECTS, INC
WARNING: UNAUTHORIZED COPYING VIOLATES U.S. COPYRIGHT LAWS AND WILL SUBJECT THE VIOLATOR TO LEGAL PROSECUTION.

CONSULTANTS
STRUCTURAL:
SK INTERNATIONAL, INC.
130 SOUTH MAIN STREET
HUNTSVILLE, AL 35811
(256) 852-3098

MECHANICAL:
CRABTREE ENGINEERING
726 S. MT. MORIAH
MEMPHIS, TN 38117
(901) 767-9898

PLUMBING:
CRABTREE ENGINEERING
726 S. MT. MORIAH
MEMPHIS, TN 38117
(901) 767-9898

ELECTRICAL:
CHS ENGINEERING
726 S. MT. MORIAH
MEMPHIS, TN 38117
(901) 767-2557

SEAL

Holiday Inn MILLENNIUM
BOSSIER CITY, LOUISIANA

SHEET NAME
CANOPY DETAILS

DATE 10/26/07
DRAWN BY DOH
CHECKED BY PL
FILE NAME 1006-A708
SCALE AS NOTED
PROJECT NO. 1507
DRAWING A7.8