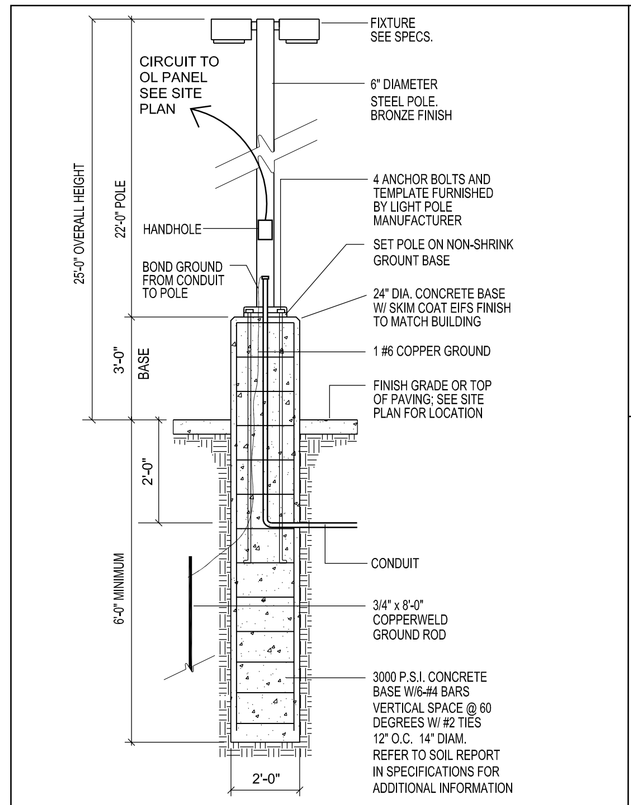

1 TYPICAL SHOE BOX SITE LIGHT POLE

NO SCALE

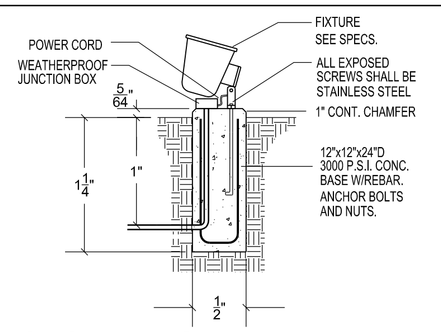

2 GROUND MOUNTED FIXTURE

NO SCALE

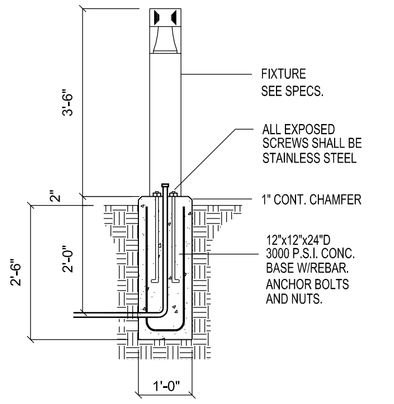

3 BOLLARD FIXTURE

NO SCALE

ELECTRICAL SITE NOTES

1. COORDINATE EXACT REQUIREMENTS FOR, AND LOCATION OF, INTERNALLY LIT SIGN WITH SIGN CONTRACTOR.
2. DISCONNECTS SHALL BE INSTALLED FOR ALL SIGNAGE IN ACCORDANCE WITH ARTICLE 600-6 OF THE LASTEST ADOPTED EDITION OF THE NEC.
3. ALL EXTERIOR SIGNAGE SHALL BE AS DIRECTED BY OWNER AND IN COMPLIANCE WITH ADA GUIDELINES AND LOCAL CODES. CONTRACTOR TO PROVIDE ELECTRICAL CONDUIT AND POWER. SIGNAGE IS O.F.O.I.
4. ALL CONDUIT FOR ELECTRICAL SERVICE SHALL BE INSTALLED PER UTILITY STANDARDS AND SHALL HAVE MINIMUM 42" COVER. CONTRACTOR SHALL BE RESPONSIBLE FOR FILING WITH UTILITY AND INSTALLING PER UTILITY INSTRUCTIONS.
5. CONTRACTOR SHALL INSTALL ALL TELEPHONE CONDUIT PER TELEPHONE COMPANY STANDARDS. CONTACT PHONE COMPANY BEFORE ANY WORK BEGINS AND COORDINATE WITH PHONE COMPANY.
6. CONTRACTOR SHALL INSTALL ALL CABLE CONDUIT PER CABLE COMPANY STANDARDS, COORDINATE AS REQUIRED.
7. CONTRACTOR SHALL PROVIDE A COMPLETE, OPERATIONAL FIRE ALARM SYSTEM IN ACCORDANCE WITH ALL CODE, INTERCONTINENTAL HOTELS, INC. (FRANCHISE), AND MANUFACTURER'S REQUIREMENTS, INCLUDING DEVICES REQUIRED BY LOCAL CODE BUT NOT INDICATED HEREIN. SYSTEM SHALL INCLUDE ALL CONNECTIONS TO FLOW AND TAMPER SWITCHES AS WELL AS P.I.V. AND DUCT SMOKE DETECTORS FOR MECHANICAL UNITS. PROVIDE CARBON MONOXIDE DETECTORS IN ALL AREAS OF GAS FIRED APPLIANCES.
8. ELECTRICAL CONTRACTOR SHALL COORDINATE INSTALLATION OF POOL EQUIPMENT WITH POOL SUPPLIER.

ELECTRICAL LEGEND

T	TRANSFORMER
	CONDUIT STUB UP
EUP	ELECTRICAL UNDERGROUND PRIMARY
EUS	ELECTRICAL UNDERGROUND SECONDARY
TELE	TELEPHONE CONDUIT
TV	CABLE TV CONDUIT
	ELEC. CONDUIT
PIV	POST INDICATOR VALVE CONFIRM LOCATION WITH CIVIL

GENERAL NOTES

1. METERING EQUIPMENT SHALL BE INSTALLED IN ACCORDANCE WITH THE REQUIREMENTS OF THE LOCAL UTILITY COMPANY. CONTRACTOR SHALL CONFIRM ALL REQUIREMENTS AND MAKE ADJUSTMENTS NECESSARY FOR COMPLETE INSTALLATION. MAIN SERVICE DISCONNECT SHALL BE ABLE TO BE LOCKED IN THE "OPEN" POSITION.
2. ALL EXTERIOR LIGHTING SHALL BE CONTROLLED VIA PHOTOCELL WITH OVERRIDE SWITCH LOCATED AT FRONT DESK.

STATISTICS

Description	Symbol	Avg	Max	Min
Calc Zone #1	+	4.9 fc	27.3 fc	0.0 fc

LUMINAIRE SCHEDULE

CALLOUT	SYMBOL	LAMP	DESCRIPTION	MODEL	INPUT WATTS	NOTES
SA		(1) 400W CLEAR ED28	SITE LIGHT	LSI CT2H FT 400 MHR MT F HSS BRZ	460	SEE ' SP' FOR POLE SPEC
SB		(1) 400W CLEAR ED28	SITE LIGHT	LSI CT2H 5 400 MHR MT F BRZ	920	SEE ' SP' FOR POLE SPEC
SE		(1) 400W CLEAR ED28	SITE LIGHT	LSI CT2H FT 400 MHR MT F BRZ	920	SEE ' SP' FOR POLE SPEC
SF		(1) 70W COATED ED28	OPEN DOWNLIGHT CYLINDER	LITHONIA CP 11 70M PR 120 CRS DBL	85	CANOPY PENDANT MOUNT WITH HANG STRAIGHT SWIVEL. COORDINATE COLOR WITH ARCHITECT TO MATCH STRUCTURE.
SG		(1) 400W CLEAR ED28	SITE LIGHT	LSI CT2H 3 400 MHR MT F BRZ	460	SEE ' SP' FOR POLE SPEC
SJ		(1) 100W COATED ED28	42" TALL SQUARE BOLLARD	LITHONIA KBS8 100M R5 120	125	
SK		(1) 70W COATED ED28	SURFACE MOUNTED DECORATIVE BUILDING MOUNTED LIGHT	LITHONIA WST 70M MD 120 DDBT	85	BUILDING MOUNTED AT 9' ABOVE GRADE. COORDINATE COLOR WITH ARCHITECT.
SL		(1) 100W COATED ED28	SURFACE MOUNTED FLOOD LIGHT	LITHONIA KFL2 100M SP 120 YK	125	
SM		(1) 70W COATED ED28	SURFACE MOUNTED DECORATIVE BUILDING MOUNTED LIGHT	LITHONIA WST 70M MD 120 DDBT	95	BUILDING MOUNTED AT 9' ABOVE GRADE OVER EXIT DOOR. COORDINATE COLOR WITH ARCHITECT.
SN		175W METAL HALIDE	SURFACE MOUNTED NARROW BEAM BUILDING UPLIGHT	HYDREL 7100 175M 208 SP WUS ISS LPI	200	BUILDING MOUNTED JUST ABOVE 2ND FLOOR FINISHED FLOOR. COORDINATE COLOR WITH ARCHITECT AND COORDINATE MOUNTING BACKPLATES WITH STRUCTURAL ENGINEER.
SO		(1) 42W TRT	SURFACE MOUNTED BUILDING LIGHT AT ROOF STAIR	LITHONIA WST 42TRT MD 120 DDBT	42W	MOUNT AT 8' ABOVE ROOF.
SP		N/A	BASE POLE	LITHONIA SSS 25 DDB	N/A	SEE PLAN

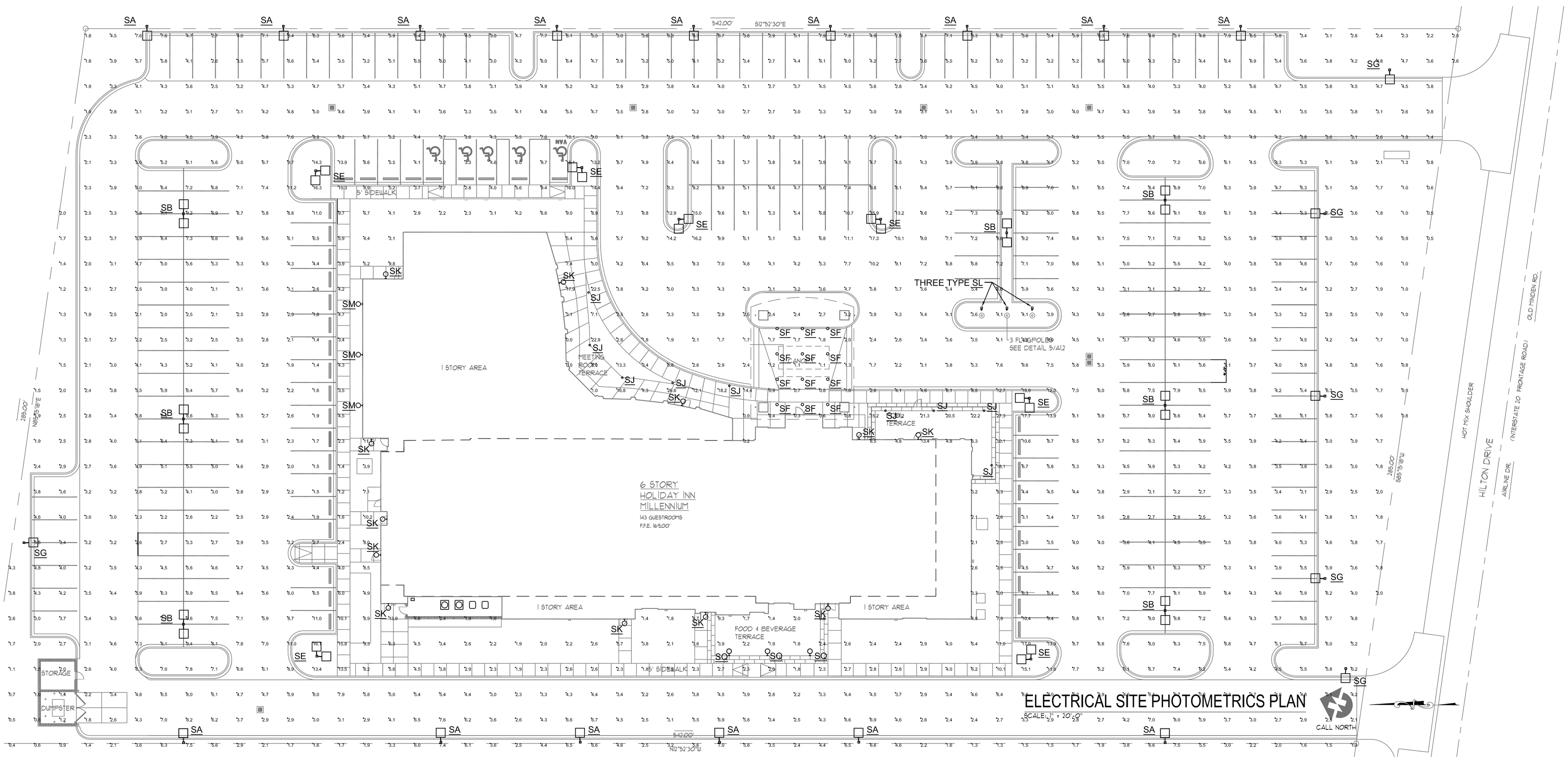

ELECTRICAL SITE PHOTOMETRICS PLAN

SCALE: 1" = 20'-0"

LLW ARCHITECTS

803 S. MOUNT MORIAH
SUITE 100B
MEMPHIS, TN 38117
(901) 683-7175 p.
(901) 683-2385 f.
llw@llwarchitects.com

NO.	ISSUED	DATE
1	ISSUED	10/26/07

NO.	REVISIONS	DATE

COPYRIGHT BY LLW ARCHITECTS, INC
WARNING: UNAUTHORIZED COPYING VIOLATES U.S. COPYRIGHT LAWS AND WILL SUBJECT THE VIOLATOR TO LEGAL PROSECUTION.

CONSULTANTS
STRUCTURAL:
SK INTERNATIONAL, INC.
130 SOUTH MAIN STREET
HUNTSVILLE, AL 35811
(256) 852-3098

MECHANICAL:
CRABTREE ENGINEERING
726 S. MT. MORIAH
MEMPHIS, TN 38117
(901) 767-9898

PLUMBING:
CRABTREE ENGINEERING
726 S. MT. MORIAH
MEMPHIS, TN 38117
(901) 767-9898

ELECTRICAL:
CHS ENGINEERING
726 S. MT. MORIAH
MEMPHIS, TN 38117
(901) 767-2557

SEAL

STATE OF LOUISIANA
Constance H. Scott
No. 26527
REGISTERED PROFESSIONAL ENGINEER
IN
ELECTRICAL ENGINEERING

Holiday Inn MILLENNIUM

BOSSIER CITY, LOUISIANA

SHEET NAME
ELECTRICAL SITE PHOTOMETRICS PLAN

DATE 10/26/07
DRAWN BY JSH
CHECKED BY CHS
FILE NAME
SCALE AS NOTED
PROJECT NO. 1507
DRAWING

E00.1