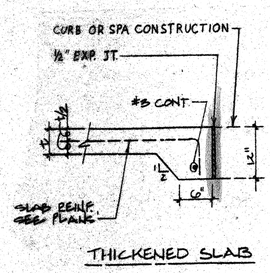

THICKENED SLAB

10 TYP. SLAB ON GRADE DETAILS

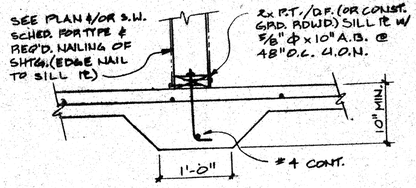

A : @ SHEARWALLS

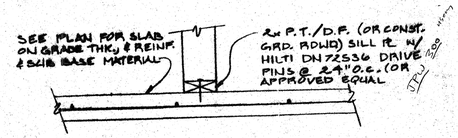

B : @ PARTITION WALLS

7 NON-BEARING INTERIOR WALL

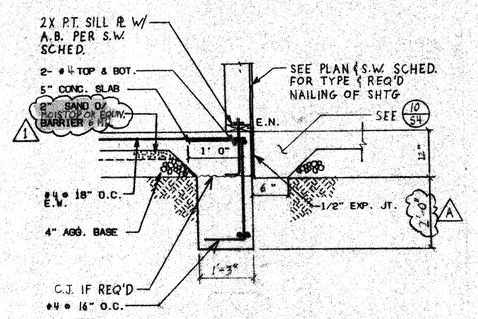

N.T.S.

4 EXT. FTG. @ PAVING

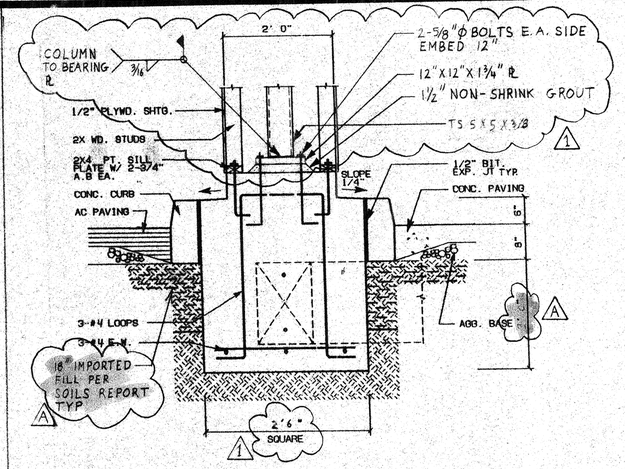

1 FOOTING @ ENTRY COL

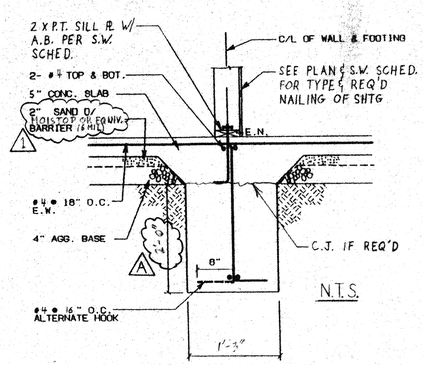

N.T.S.

8 INT. BEARING FTG.

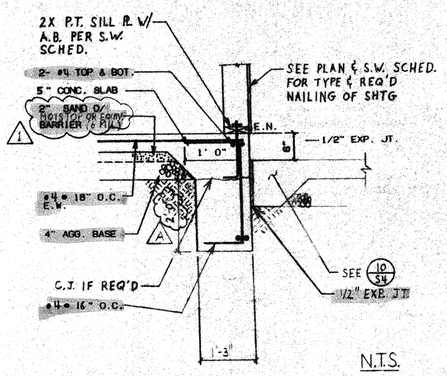

N.T.S.

5 EXT. FTG. @ PATIO

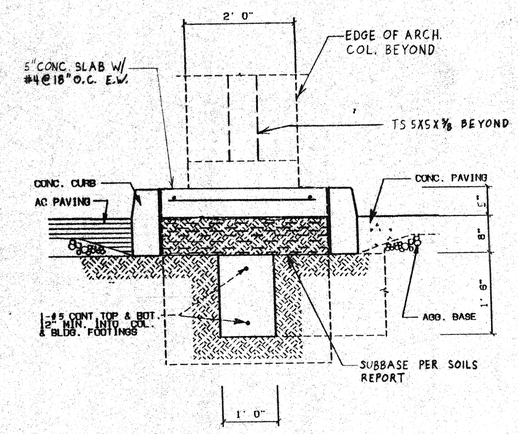

2 TIE BEAM

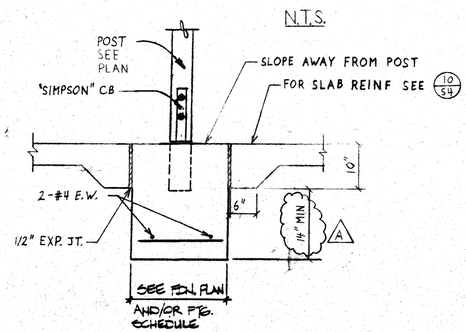

9 EXT. POST FTG

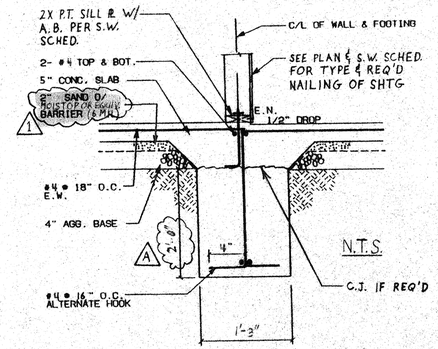

N.T.S.

6 CORRIDOR FTG.

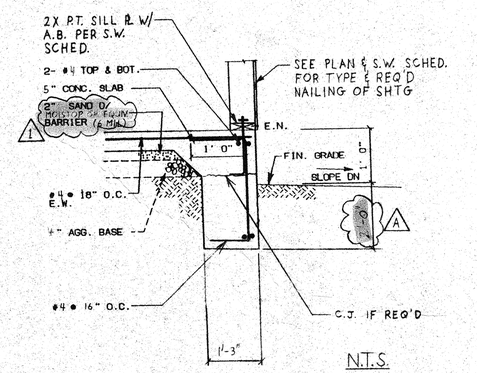

N.T.S.

3 EXT. FTG.

REVISIONS	BY

FOUNDATION DETAILS

37-UNIT MOTEL
2834 EL CAMINO REAL
REDWOOD CITY, CA 94063

IDS CONSULTANTS INC.
STRUCTURAL ENGINEERS
SAN FRANCISCO
(510) 798-6860
FAX (510) 798-6861
2389 Boulevard Street
Concord, CA 94520

DRAWN	TEL
CHECKED	
DATE	10/1/92
SCALE	
JOB NO.	1323
SHEET	S-4
OF	SHEETS