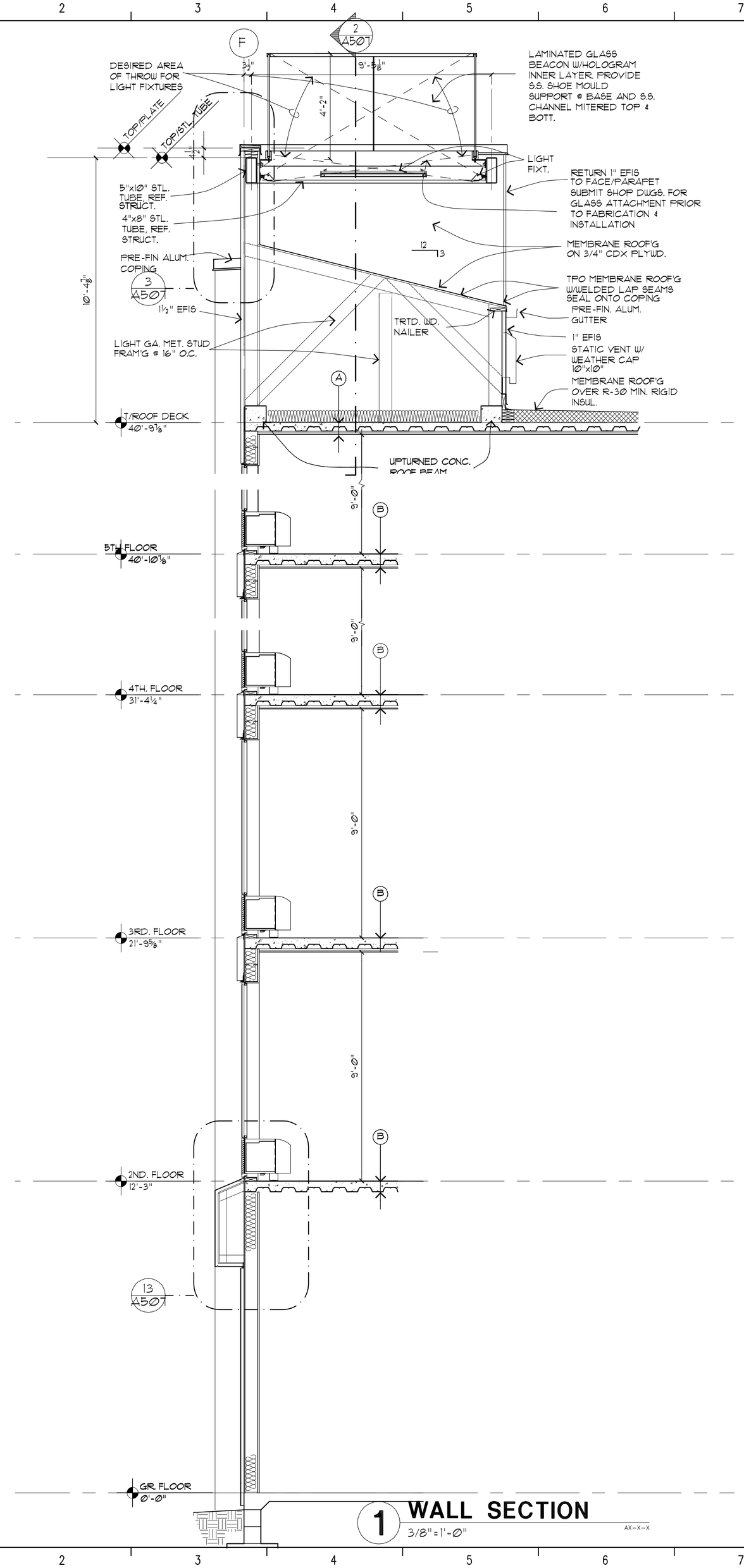

1 **WALL SECTION**
3/8"=1'-0"
AX-X-X

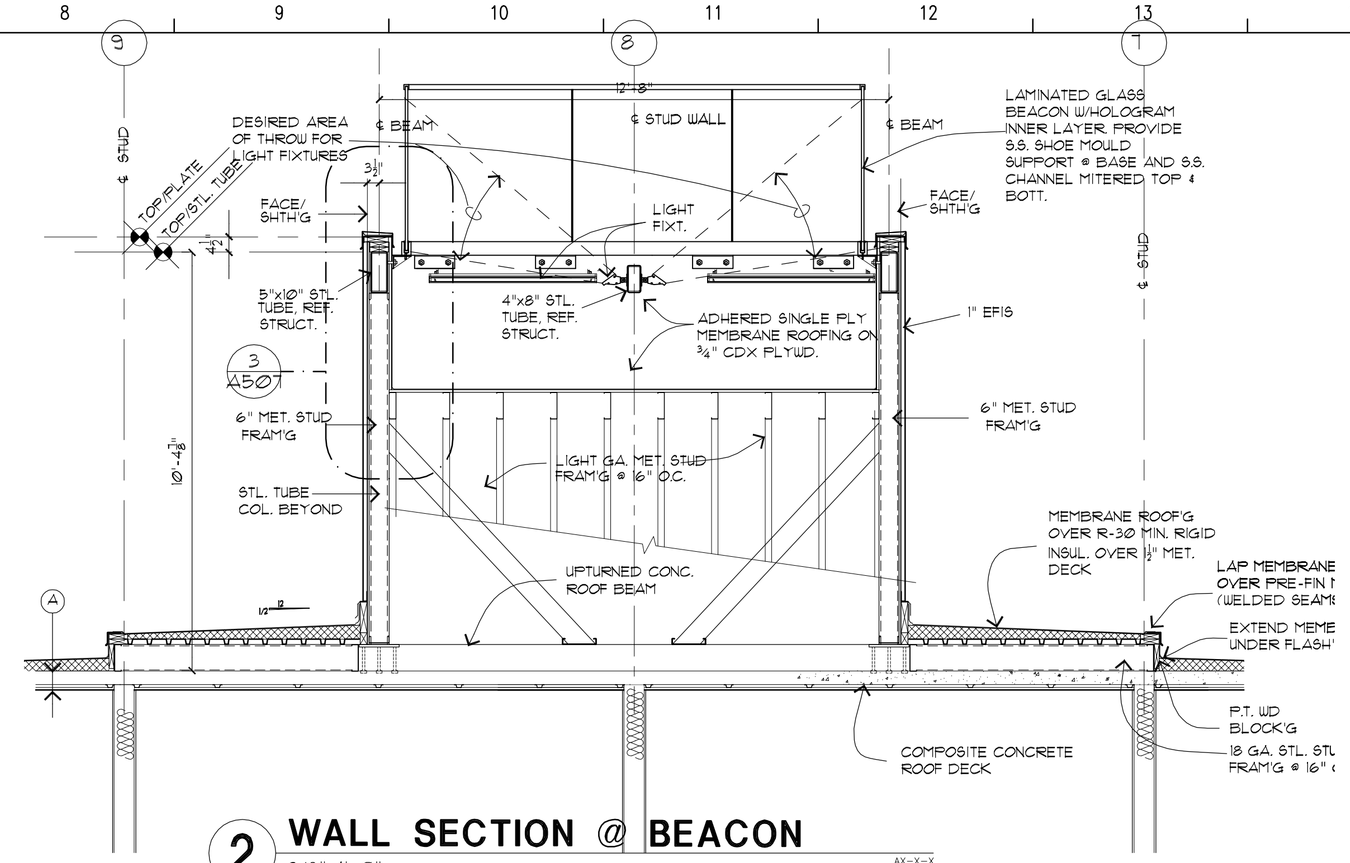

2 **WALL SECTION @ BEACON**
3/8"=1'-0"
AX-X-X

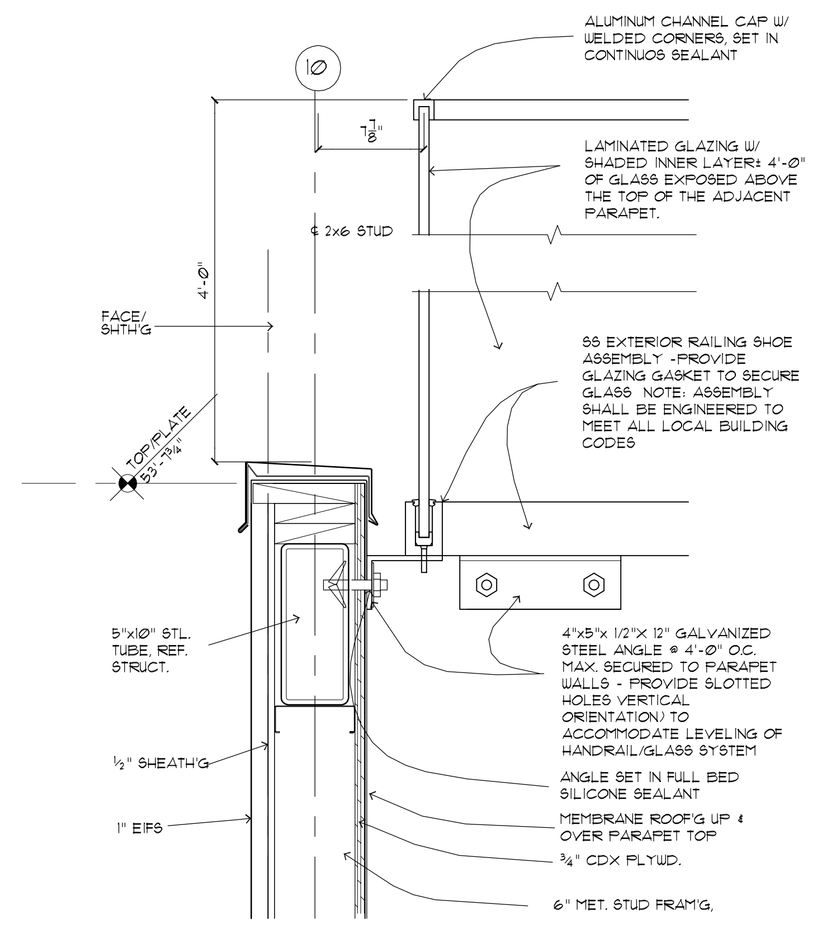

3 **BEACON CONNECTION DETAIL**
1½"=1'-0"
AX-X-X

Richard Molenaar
ARCHITECT

REGISTERED ARCHITECT
Richard Molenaar
1047
Memphis, TN
STATE OF MISSISSIPPI
7/11/15

PROJECT NAME:
HOME2 SUITES BY HILTON
Old Fannin Road Flowood, Mississippi

SHEET TITLE:
Wall Sections

PROJECT NO.	LATEST REVISION:
13012	1
DRAWN BY: acj / CHECKED BY: rm	SHEET NUMBER:
DATE: July 11 2015	A507

REISSUED: JUNE 07, 2016