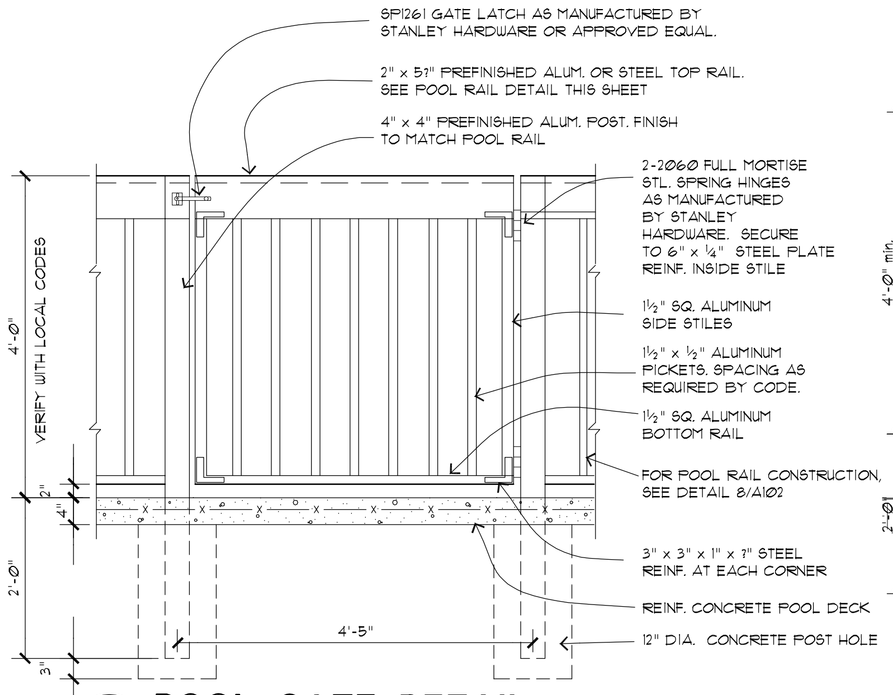

15 POOL GATE DETAIL
¾" = 1'-0"

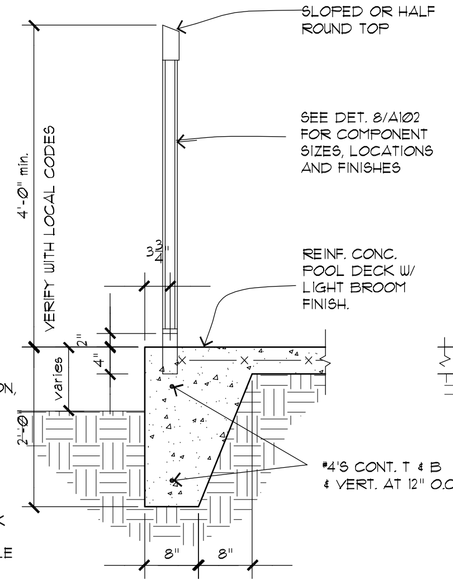

13 POOL RAIL DETAIL
¾" = 1'-0"

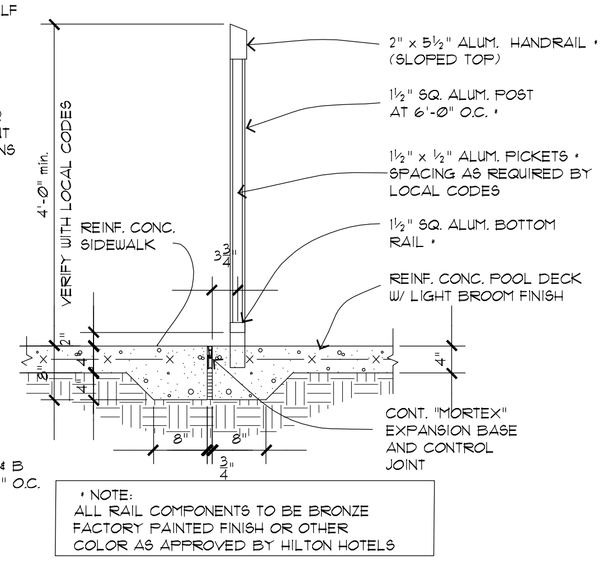

* NOTE:
ALL RAIL COMPONENTS TO BE BRONZE FACTORY PAINTED FINISH OR OTHER COLOR AS APPROVED BY HILTON HOTELS

9 POOL RAIL DETAIL
¾" = 1'-0"

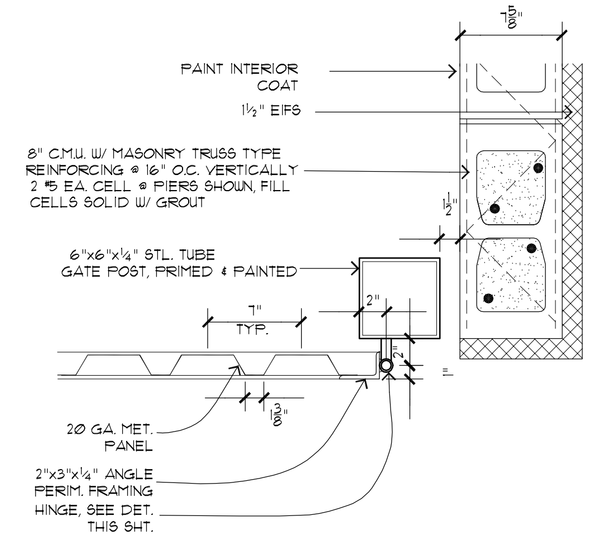

6 GATE SECT.
1½" = 1'-0"

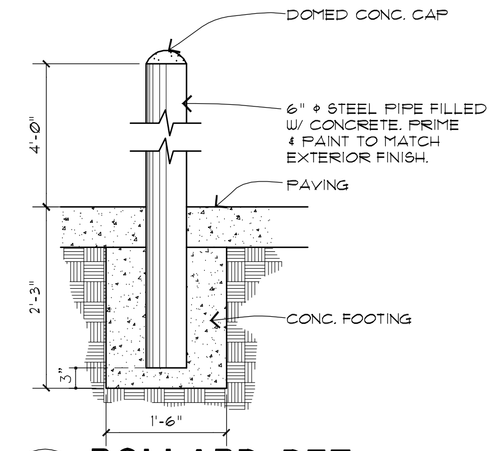

5 BOLLARD DET.
¾" = 1'-0"

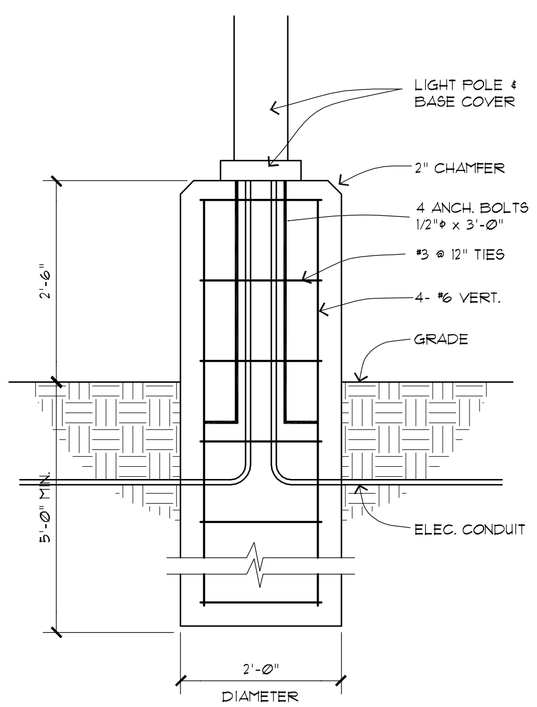

14 LIGHT POLE BASE
¾" = 1'-0"

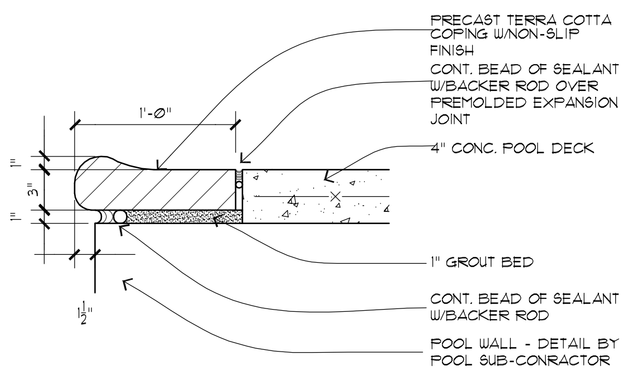

12 WALL CAP DET.
1½" = 1'-0"

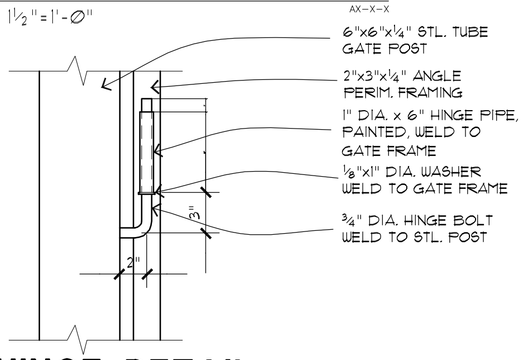

11 HINGE DETAIL
1½" = 1'-0"

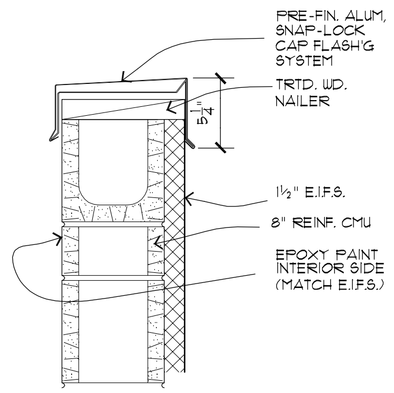

8 WALL CAP DET.
1½" = 1'-0"

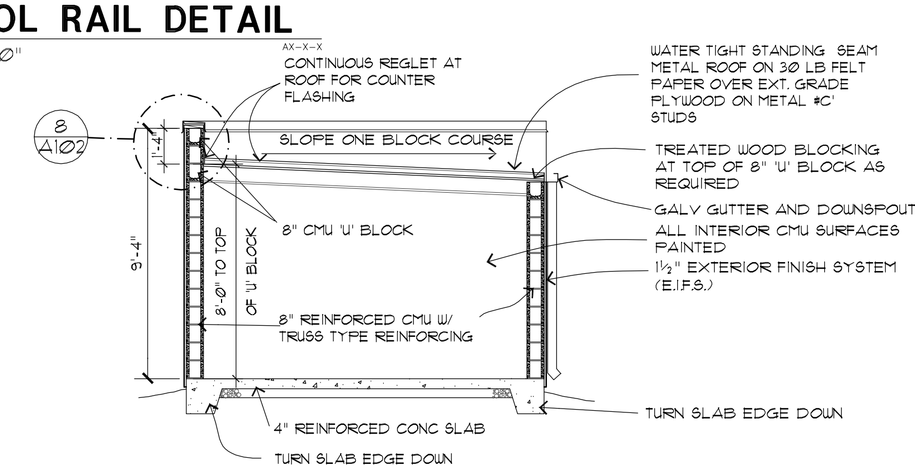

4 TRASH ENCL./STOR. SECTION
¼" = 1'-0"

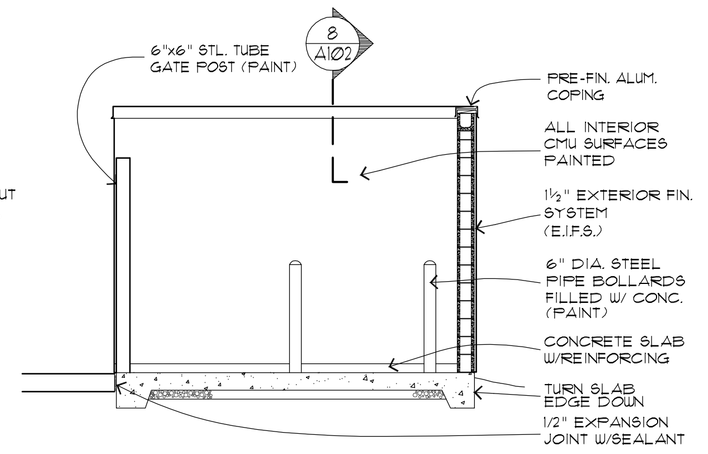

3 TRASH ENCL./STOR. SECTION
¼" = 1'-0"

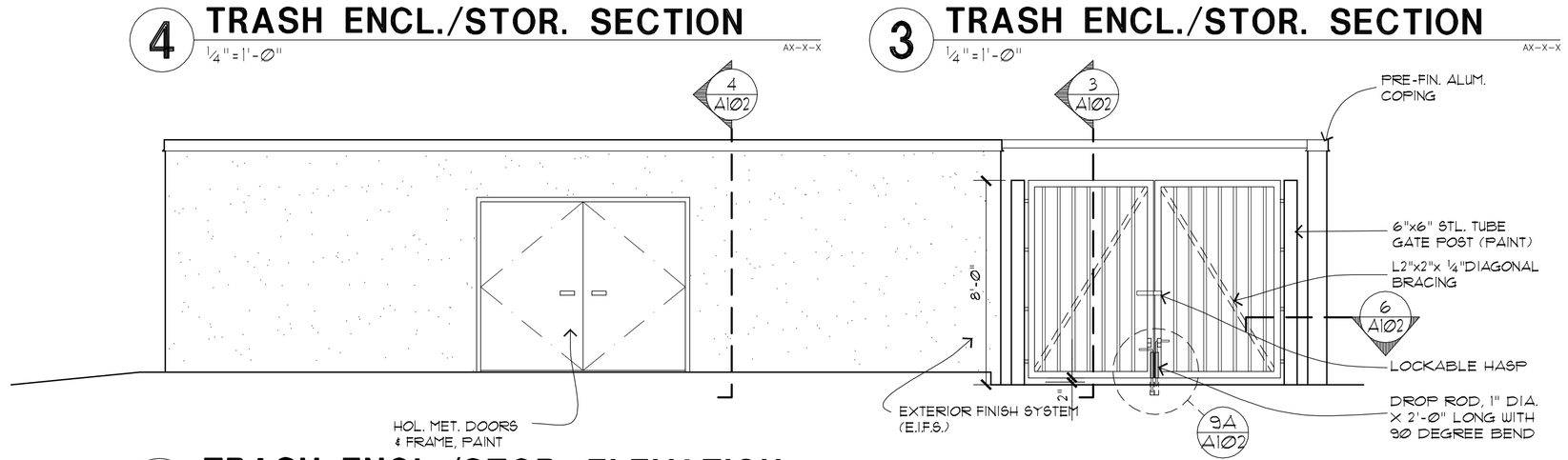

2 TRASH ENCL./STOR. ELEVATION
¼" = 1'-0"

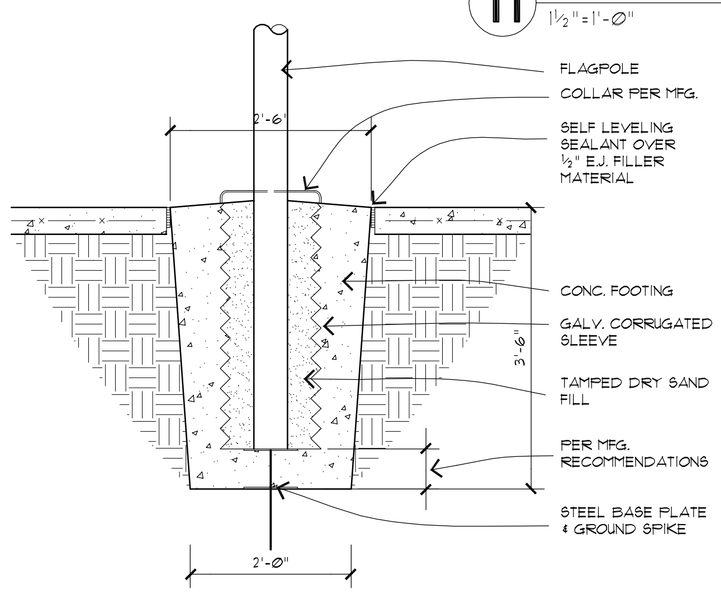

10 FLAGPOLE DETAIL
¾" = 1'-0"

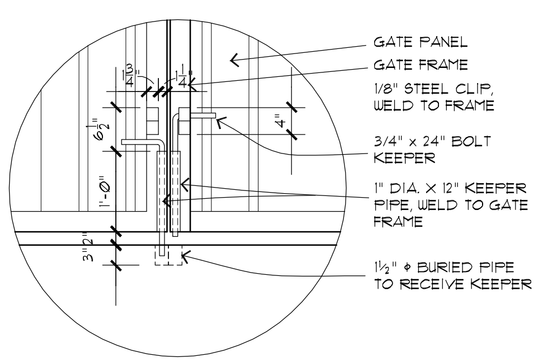

7 DROP ROD DETAIL
3/4" = 1'-0"

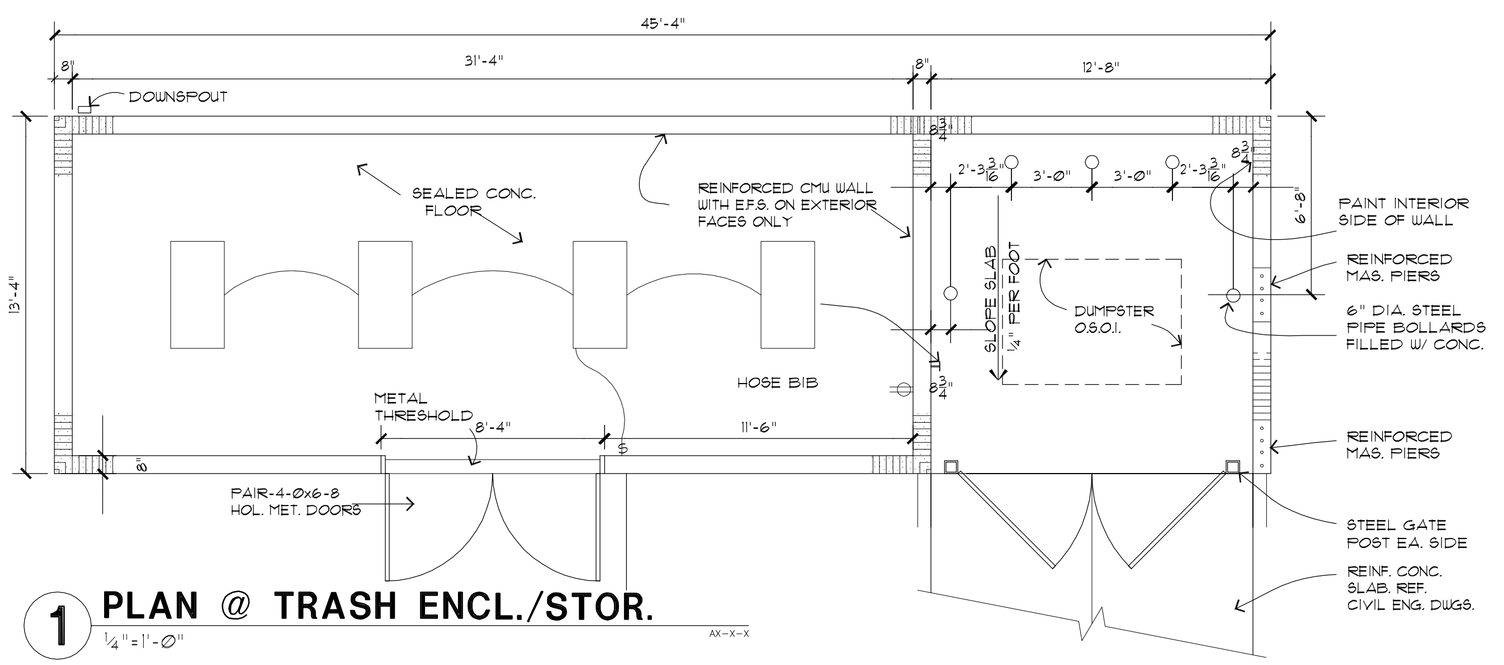

1 PLAN @ TRASH ENCL./STOR.
¼" = 1'-0"

Richard Molenaar
ARCHITECT

PROJECT NAME:
HOME2 SUITES BY HILTON

W Mane Street — West Monroe, Lousiana

SHEET TITLE:
Site Details

PROJECT NO.	LATEST REVISION:
13010	△
DRAWN BY: acj / CHECKED BY: rm	SHEET NUMBER:
DATE: Sept 05,2014	A102