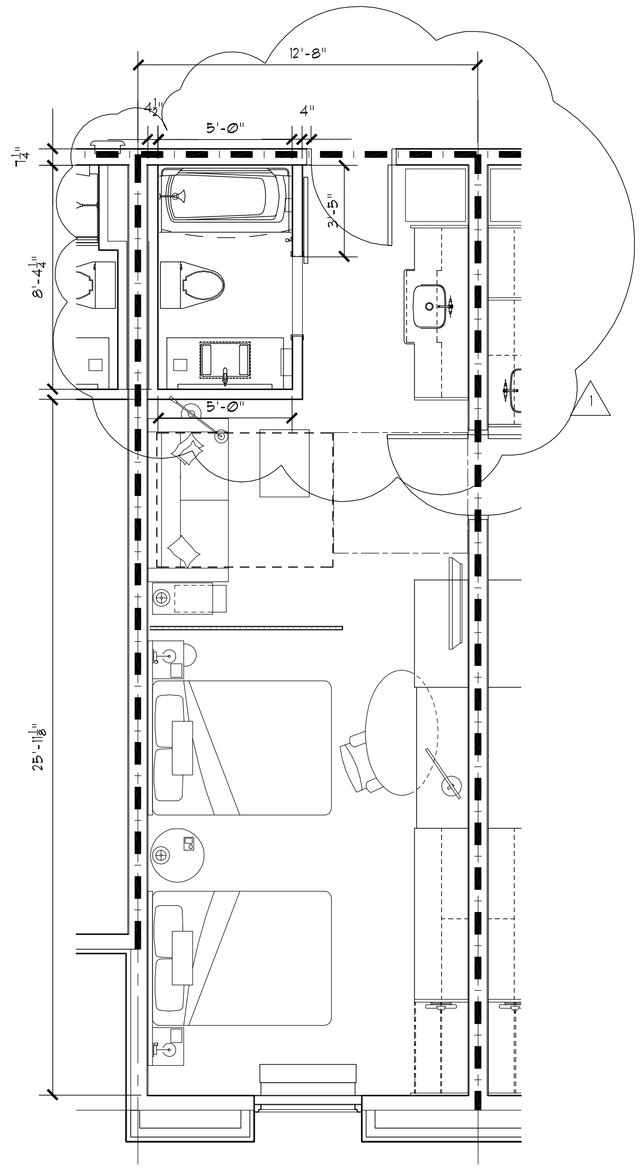

1 CONN. Q/Q STUDIO
1/4"=1'-0"

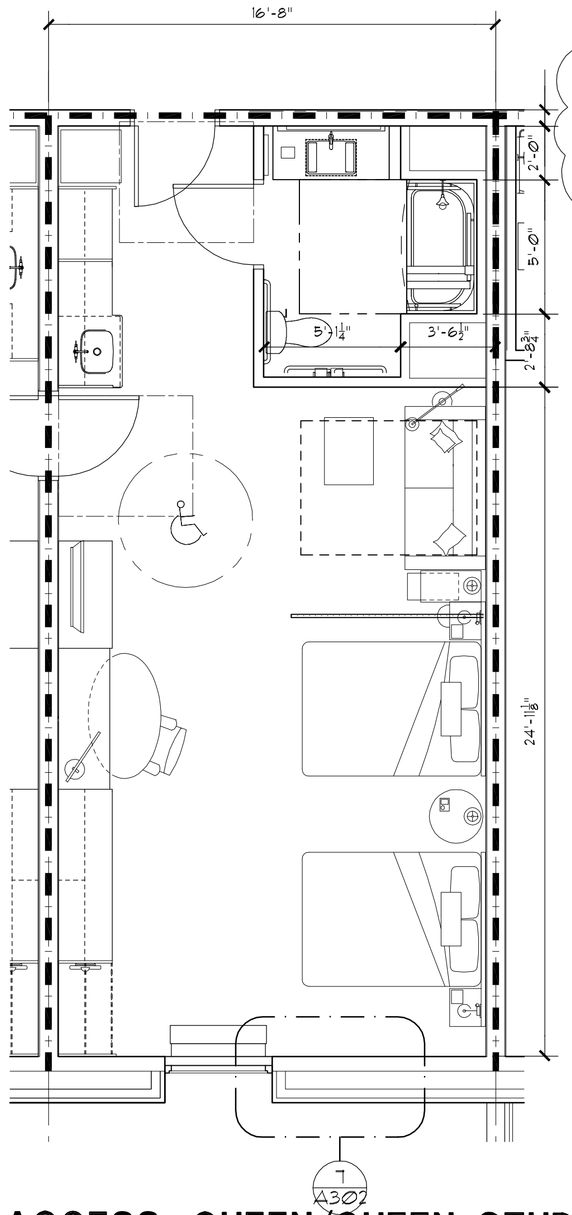

2 ACCESS. QUEEN/QUEEN STUDIO
1/4"=1'-0"

559 SQ. FT.

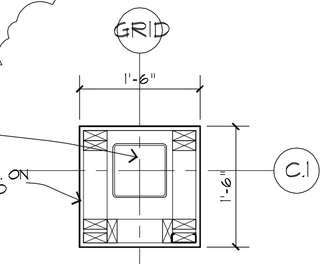

4 PLAN DETAIL
3/4"=1'-0"

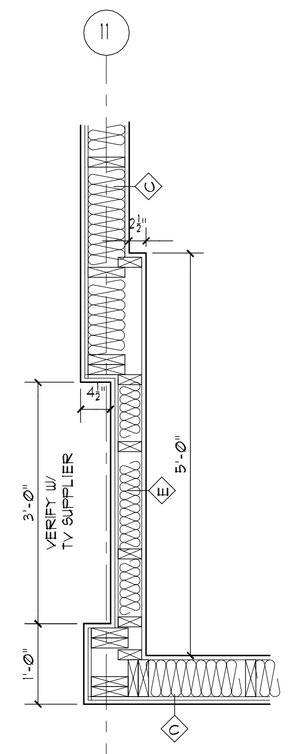

3 PLAN DETAIL
3/4"=1'-0"

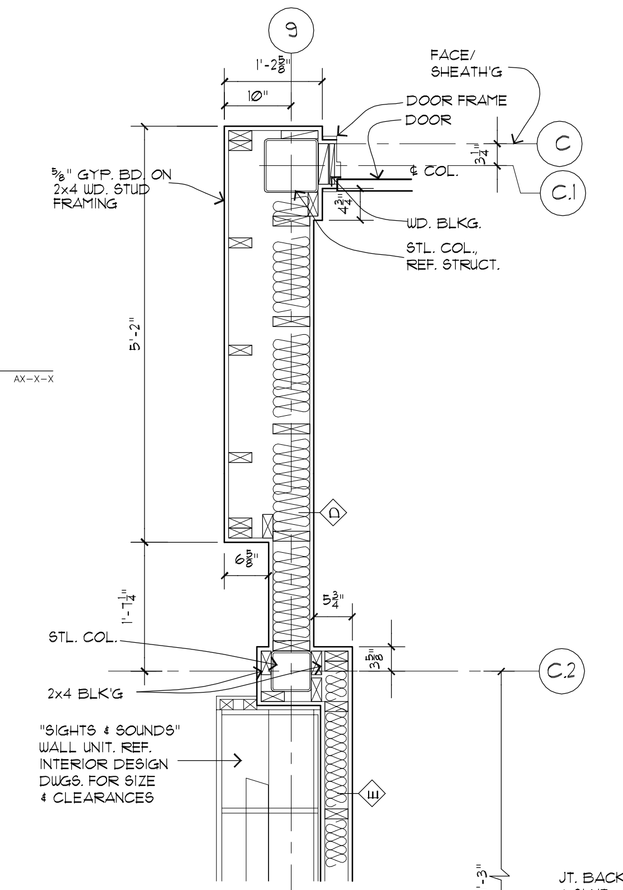

6 PLAN DETAIL
3/4"=1'-0"

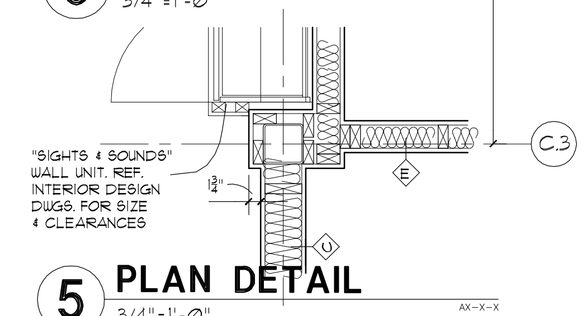

5 PLAN DETAIL
3/4"=1'-0"

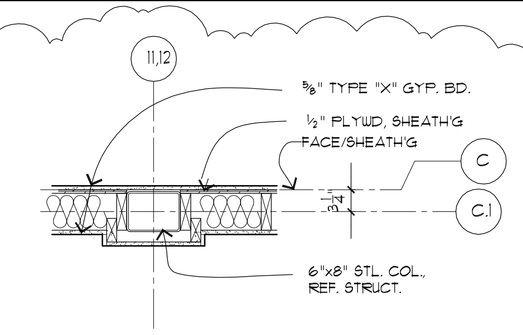

8 PLAN DETAIL
3/4"=1'-0"

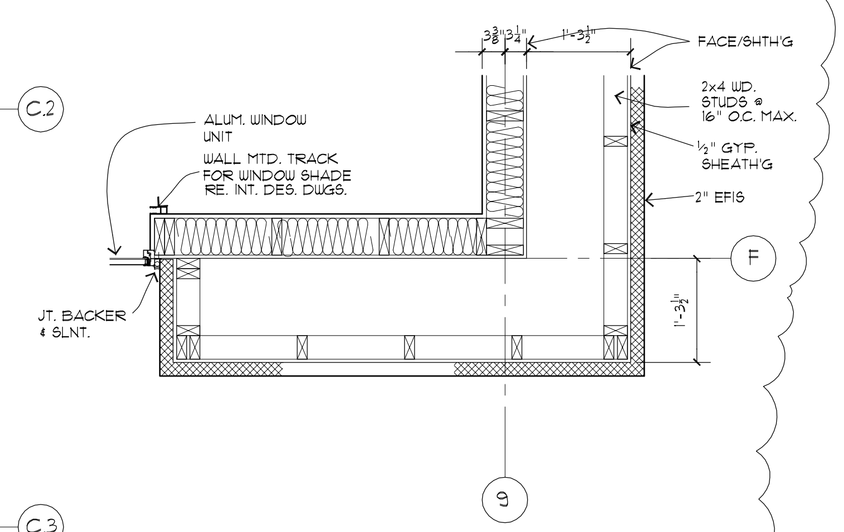

7 PLAN DETAIL
3/4"=1'-0"

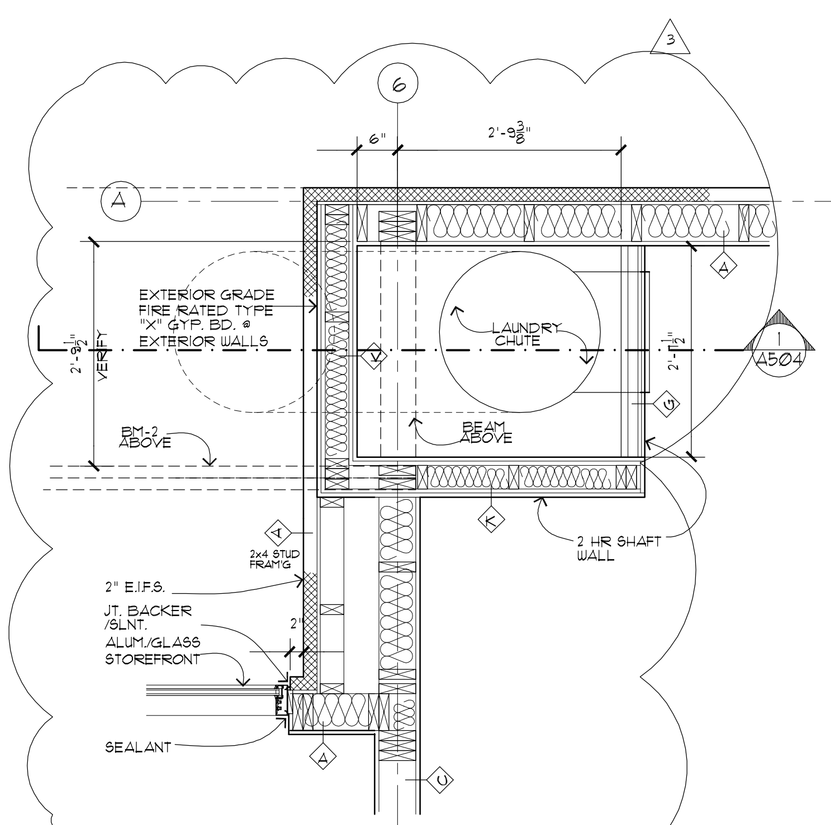

9 PLAN DETAIL
3/4"=1'-0"

Richard Molenaar
ARCHITECT

RICHARD MOLENAAR
No. 12-22
STATE OF LOUISIANA
REGISTERED ARCHITECT
Mar 24-14

PROJECT NAME:
HOME2 SUITES BY HILTON

W Mane Street West Monroe, Lousiana

SHEET TITLE:

PROJECT NO.	LATEST REVISION:
13010	Nov. 24, 2015 (3)
DRAWN BY: cj / CHECKED BY: rm	SHEET NUMBER:
DATE: Sept 05, 2014	A302

REISSUED:NOV. 25,2015

ACCESSORIES LEGEND:

CG.	CASEGOOD PACKAGE	G.	GUEST ROOM FURNITURE	111	TABLE LAMP # SIDE TABLE IN LIVING SPACE
0714	QUEEN HEADBOARD	1058	GRAPHIC ART ABOVE SLEEPER	112	TASK LAMP # WORK STATION
0711	KING HEADBOARD	1051	GRAPHIC ART ABOVE TABLE	113	TASK LAMP # NIGHT STAND / HEADBOARD
0719	SIDE TABLE # SOFA	1056	QUEEN BED DUST SKIRT	114	LIGHT FIXTURE # VANITY
0260	NIGHTSTAND	1057	ACCESSIBLE QUEEN DUST SKIRT	115	FLOOR LAMP # SLEEPER SOFA
0283	STUDIO WORKING WALL	1058	KING BED DUST SKIRT	116	SCONCE # END WALL
0284	CONNECTING STUDIO WORKING WALL	1059	QUEEN DUVET INSERT	117	TABLE LAMP # NIGHTSTAND
0285	ACCESSIBLE STUDIO WORKING WALL	1060	QUEEN DUVET COVER FABRICATION	118	SCONCE # ONE BEDROOM END WALL
0286	QUEEN SUITE WORKING WALL	1061	KING DUVET INSERT	120	FULL LENGTH MIRROR
0287	QUEEN SUITE STORAGE/TV UNIT	1062	KING DUVET COVER FABRICATION	121	VANITY MIRROR
0288	ACCESSIBLE SUITE WORKING WALL	1063	LUMBAR PILLOW	125	SLEEPER SOFA
0289	ACCESSIBLE SUITE STORAGE/TV UNIT	1068	QUEEN MATTRESS AND BOX SPRING	126	OTTOMAN
0290	KING STUDIO WORKING WALL	1069	QUEEN BED BASE	127	TASK CHAIR
0291	DOUBLE QUEEN STUDIO WORKING WALL	1070	ACCESSIBLE QUEEN BED BASE	128	DINING CHAIR # ONE BEDROOM TABLE
0292	CALIFORNIA STUDIO WORKING WALL	1071	KING MATTRESS AND BOX SPRING	129	LOUNGE CHAIR # ONE BEDROOM
0293	QUEENQUEEN ACCESSIBLE STUDIO WORKING WALL	1072	KING BED BASE	132	ROLLER SHADE FABRICATION # WINDOW
		1076	BATHROOM VANITY # CALIFORNIA ROOM SQUARE DINING TABLE # ONE BEDROOM & ACCESSIBLE SUITE	133	ROLLER SHADE # LARGE ACCESSIBLE STUDIO WINDOW
		1078	BATHROOM VANITY	134	ROLLER SHADE # SMALL ACCESSIBLE STUDIO WINDOW
		1081	ACCESSIBLE BATHROOM VANITY	135	DRAPERY FABRICATION # ROOM DIVIDER
		1082	SHOWER CURTAIN # ACCESSIBLE BATHTUB	136	DRAPERY FABRICATION # CLOSET
		1101	SHOWER CURTAIN # ACCESSIBLE ROLL-IN SHOWER	137	DRAPERY FABRICATION # ACCESSIBLE CLOSET

FINISH SCHEDULE

100 — Room Number
Room Name — Room Name
A/1/A/1
Ceiling Finish
Wall Finish
Base Finish
Floor Finish

Floors

A. Thin Set Decorative Porcelain Tile
B. Painted Concrete
C. Carpet and Pad
D. Vinyl Composition Tile
E. Carpet Tiles
F. Porcelain or Ceramic Tile 20"x20"
G. Concrete, Sealed
H. Quarry Tile
J. Porcelain Tile, Wood Look, 9"X36"
K. ECOSurfaces ECOstone interlocking rubber tiles, 1/4" thick. Colour selected by Owner.

Base

1. 4" Vinyl
2. Ceramic Tile
3. 4" Carpet w/Top Binding Edge
4. Match Flooring
5. Wood Base as Approved by Hilton Hotels
6. 6" Carpet w/Top Binding Edge
7. None Required

Walls

A. Painted Gyp. Bd. (Eggshell Latex Enamel)
B. Ceramic Tile
C. Vinyl Wallcovering
D. Painted Gyp. Bd. (Semi-gloss Oil Base Enamel)
E. Painted Concrete Masonry Units
F. Microvented Type I Vinyl Wallcover'g.
G. NOT USED

Ceilings

1. Spray Aristex on Gyp. Bd.
2. New Ceiling Panel System Identical to Armstrong #551 Chamfered Cirrus Pattern, 24"x24"x¾" Tegular Lay-In for Suprafine 9/16" Exposed Tee Grid. Panel & Grid Colour Selected By Interior Designer From Standard Colour Selections.
3. Painted Gyp. Bd. (Smooth Finish) Colour Selected By Interior Designer. Oil Base Enamel
4. New Ceiling Panel System Identical to Armstrong #6205 Ceramaguard Nonperforated Square Lay-In, Med. Texture 24"x24"x⅝" for Prelude 15/16" Exposed Tee Grid. Panel & Grid Colour Selected By Owner From Standard Colour Selections.
5. New Ceiling Panel System Identical to Armstrong #1156 Med. Fissured Square Lay-In, Med. Texture 24"x24"x⅝" for Prelude 15/16" Exposed Tee Grid. Panel & Grid Colour Selected By Owner From Standard Colour Selections.
6. Spray Cerami finish as supplied by Permatone or approved equal. color: Ceiling white.
7. Light orange peel texture on moisture resistant gyp. bd.

KEY NOTES:

1. PTAC UNIT
2. EMERGENCY SWITCH CONTROLLING OUTLET FOR DISHWASHER - SWITCH TO BE KEY OPERATED
3. DUAL LIGHT SWITCH EQUIPPED WITH "LITE-A-SWITCH" LED BACKLIT FACEPLATE. UNIVERSAL SERIES CLEAR SWITCH WITH PLATE - MAINTAIN 2" DISTANCE FROM ALL OTHER DEVICES
4. BLACK OUT SHADE - SWITCHED OPENING DEVICE IN ACCESSIBLE ROOMS -- REFER TO ELECTRIC PLAN FOR LOCATION OF SWITCH
5. SHOWER ENCLOSURE WITH TEMPERED GLASS DOOR
6. FLOOR DRAIN
7. PREMANUFACTURED SHOWER PAN
8. CEILING MOUNTED DRAPERY ROD--PROVIDE BLOCKING AS REQ'D
9. ALTERNATE LOCATION OF DOOR FOR CONNECTING ROOMS TO ACCESSIBLE ROOMS--REFER TO OVERALL PLANS FOR LOCATION OF ACCESSIBLE ROOMS
10. DEDICATED CIRCUIT FOR DISHWASHER
11. MICROWAVE FURNISHED BY OWNER AND INSTALLED BY CONTRACTOR
12. FULL HEIGHT MIRROR
13. BEIGN CARPET TILE THIS SIDE WITH FULL TILE--FIRST TWO ROWS OF TILE TO BE INSTALLED AROUND BUILT-IN CASEGOODS
14. SWITCH CONTROLLING GARBAGE DISPOSAL
15. DEDICATED CIRCUIT FOR GARBAGE DISPOSAL
16. OPEN NUMBER
17. OPEN NUMBER
18. OPEN NUMBER
19. TOILET EXHAUST GRILLE
20. MAKE-UP AIR DIFFUSER
21. OUTLINE OF SOFA
22. APPROXIMATE LOCATIONS OF MILLWORK SUPPORTS ON FLOOR
23. ROOM SIGNAGE
24. START TILE AT DOOR WITH ONE ROW OF FULL TILES
25. EDGE OF PTAC ABOVE CARPET TILES
26. FLAT SCREEN TV MOUNTED WITH MOUNTING BRACKET TO MILLWORK - FURNISHED BY OWNER INSTALLED BY CONTRACTOR
28. FRAMING SUBCONTRACTOR TO PROVIDE 3/4" F.R.T. PLYWOOD BLOCKING TO RECEIVE ITEM INDICATED - EXTEND FULL LENGTH OF OBJECT
27. GENERAL CONTRACTOR TO COORDINATE WITH FIXTURE FABRICATOR WHERE NECESSARY TO PROVIDE PROPER BLOCKING IN WALL FOR ITEM KEYNOTED
29. OPTIONAL CATS AND ELECTRICAL FOR CONNECTIVITY PANEL -- THIS LOCATION IN MILLWORK
30. SWITCHES CONTROLLING MECHANICAL SHADES - REFER TO FFE MANUAL

FINISH LEGEND:

PT	PAINT
PL	PLASTIC LAMINATE
ST	STONE
SS	SOLID SURFACE
SF	SPECIAL FINISH
CO	CONCRETE
CP	CARPET
CT	TILE
G	GLASS
QT	QUARRY TILE
VB	VINYL BASE
VF	VINYL FLOORING

NOTE:
REFER TO SEPARATE FF&E SPECIFICATIONS MANUAL AND SEPARATE COLOR AND MATERIALS SPECIFICATIONS MANUAL FOR FURNITURE ITEMS NOT IDENTIFIED WITHIN THESE DRAWINGS