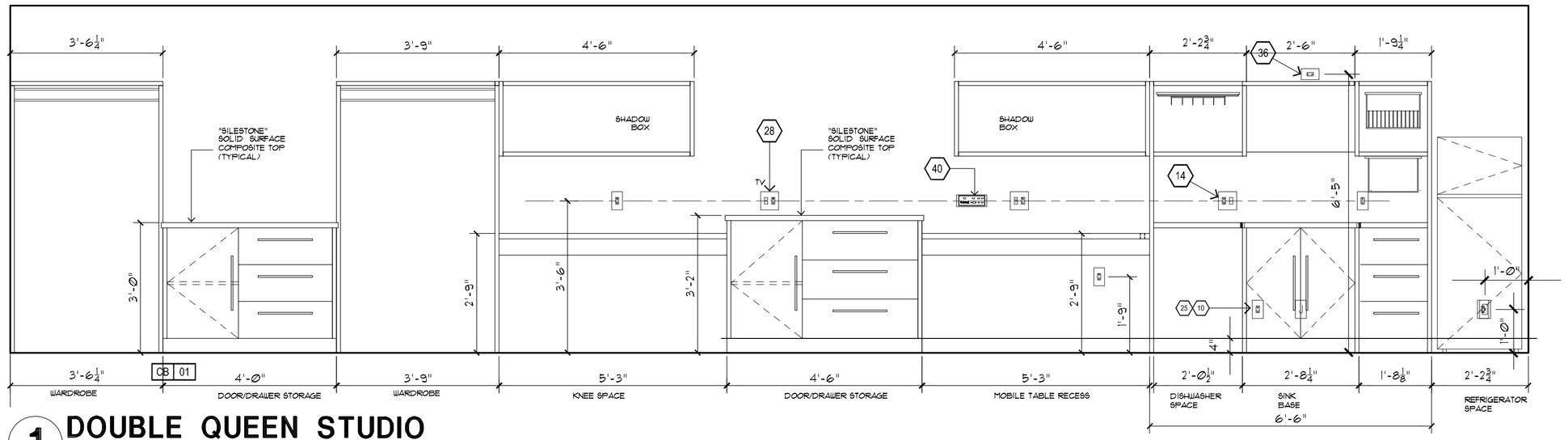

1 DOUBLE QUEEN STUDIO
1/2" = 1'-0"

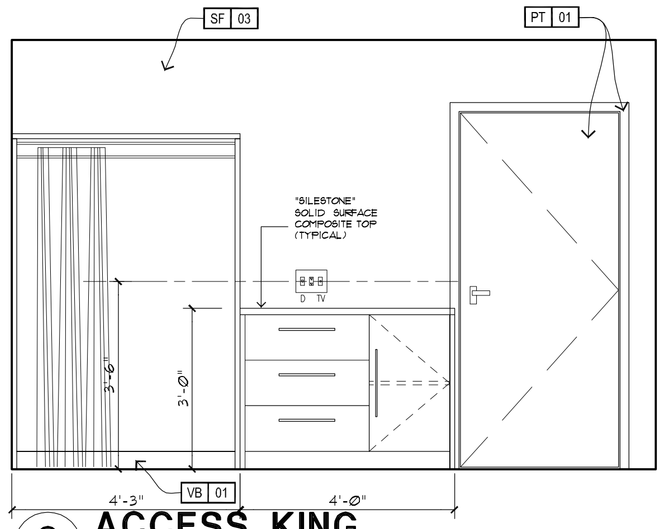

2 ACCESS KING
1/2" = 1'-0"

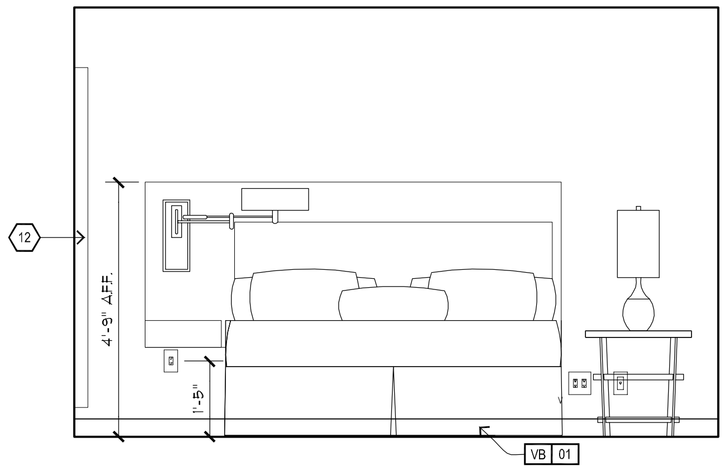

3 ACCESS KING
1/2" = 1'-0"

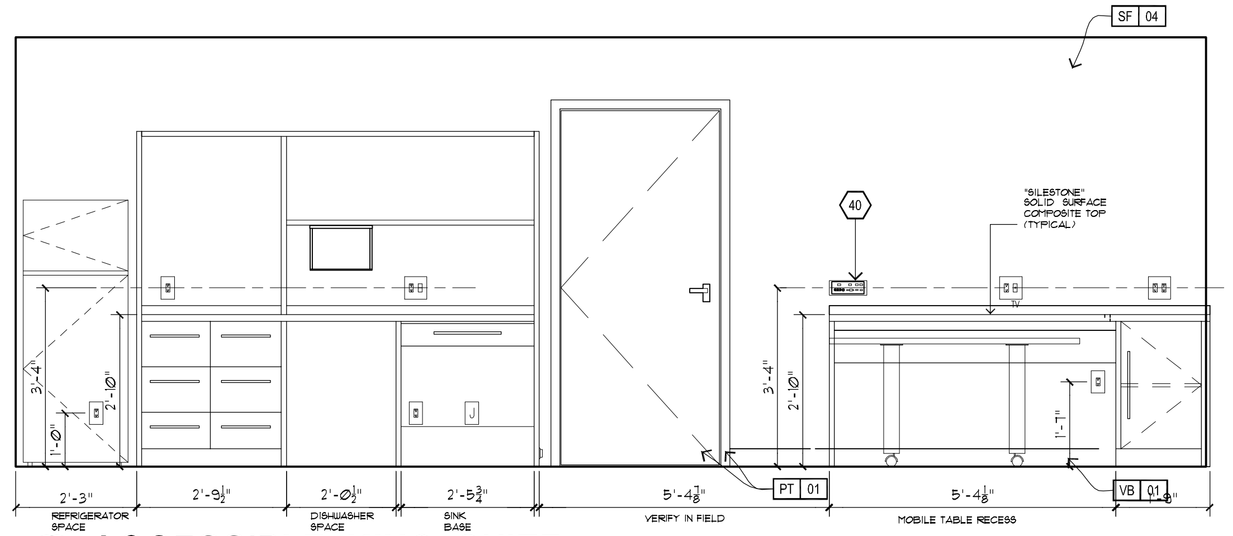

4 ACCESSIBLE KING SUITE
1/2" = 1'-0"

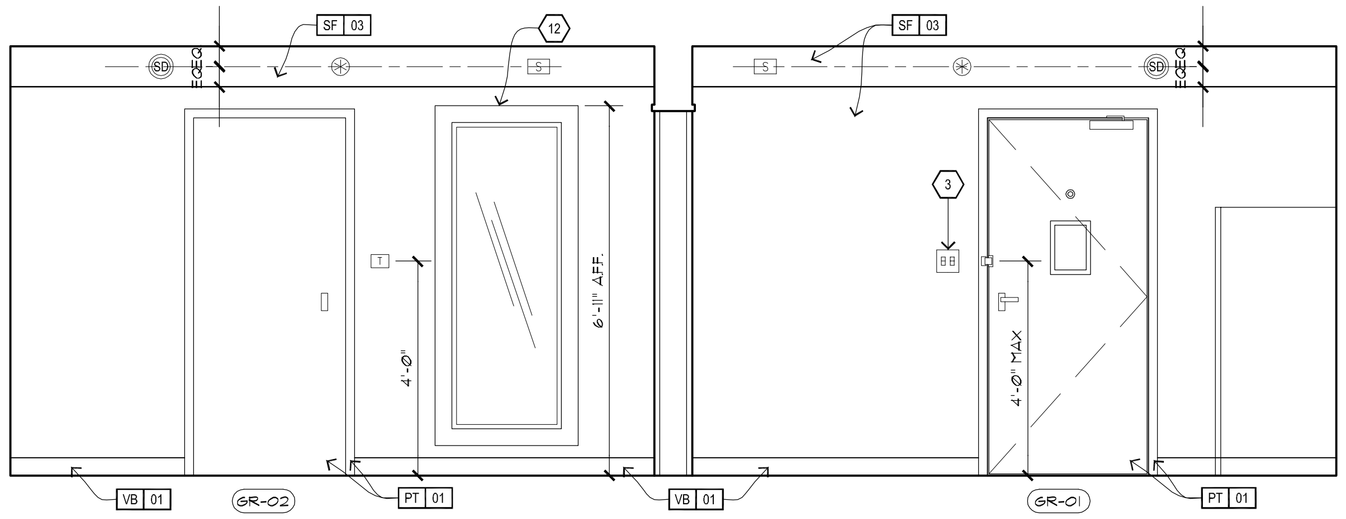

5 ACCESSIBLE KING SUITE
1/2" = 1'-0"

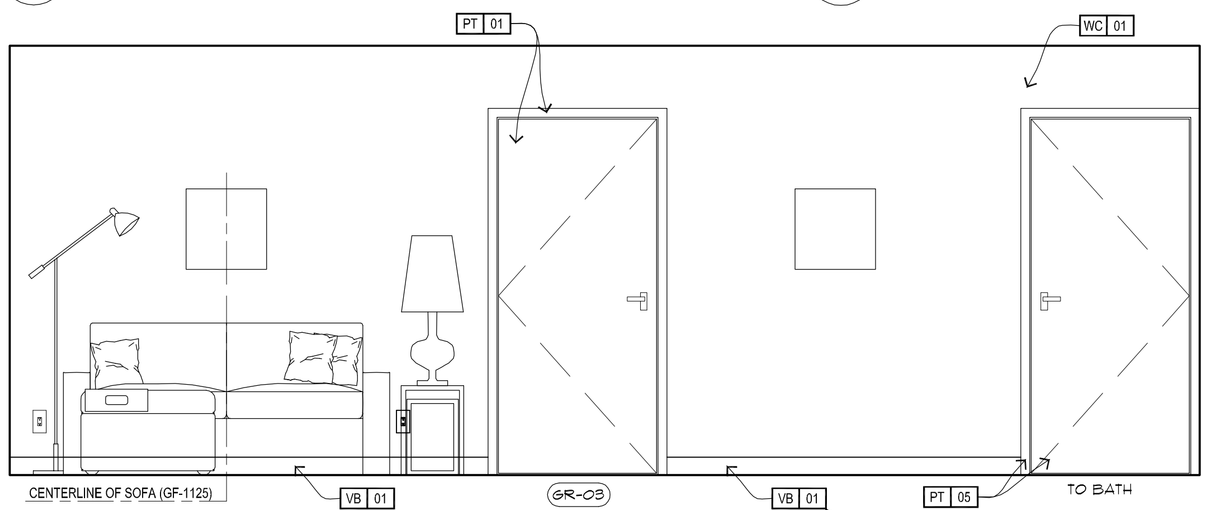

6 INT. ELEV. - ACCESSIBLE SUITE
1/2" = 1'-0"

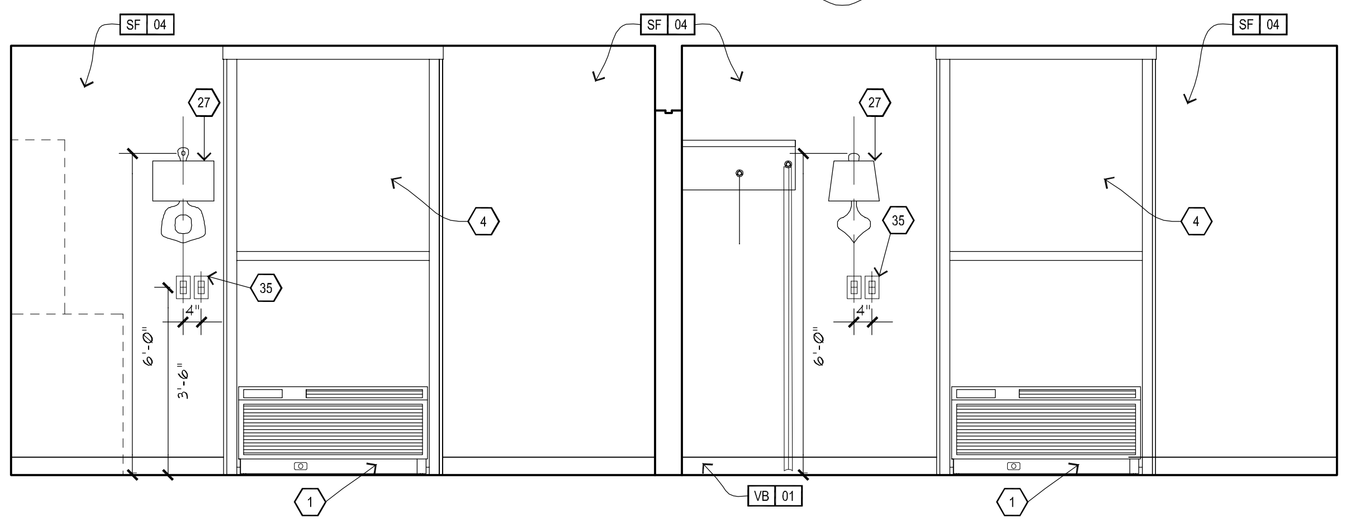

7 INT. ELEV. - ACCESSIBLE SUITE
1/2" = 1'-0"

REF. INTERIOR DESIGN DRAWINGS AND SPECIFICATIONS FINISHES.

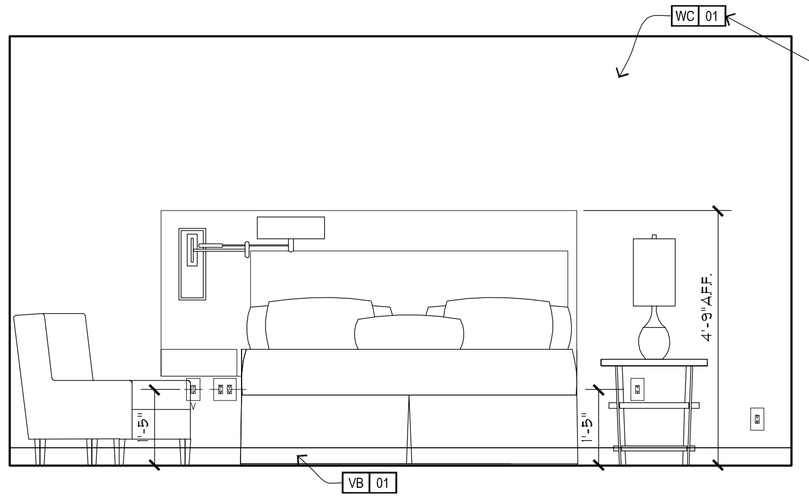

8 INT. ELEV. - ACCESSIBLE SUITE
1/2" = 1'-0"

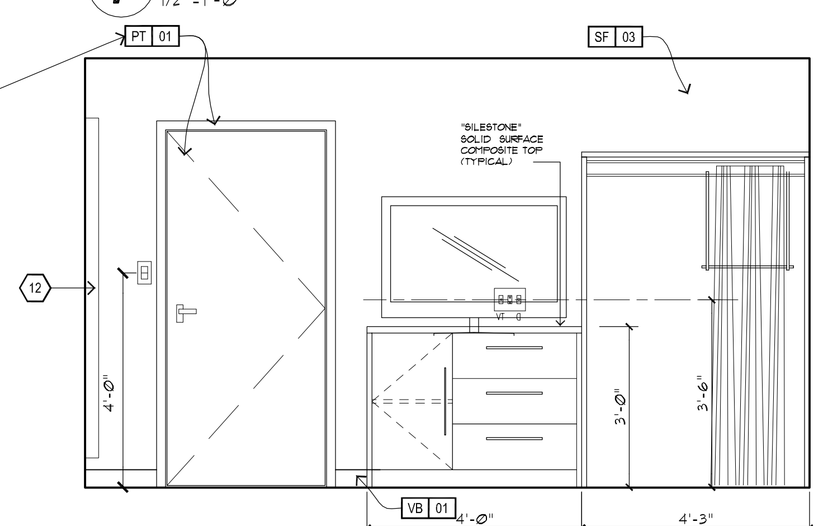

9 INT. ELEV. - ACCESSIBLE SUITE
1/2" = 1'-0"

Richard Molenaar
ARCHITECT

PROJECT NAME:
HOME2 SUITES BY HILTON
W Mane Street West Monroe, Lousiana

SHEET TITLE:
Interior Elevations

PROJECT NO. 13010
LATEST REVISION:
DRAWN BY: acj
CHECKED BY: rm
SHEET NUMBER: A603
DATE: 9/5/2014