Door Schedule

Number	Door Width	Door Hght	Door Thk	Frame Elev.	Frame Mat'l	Frame Fin.	Frame Elev.	Frame Mat'l	Frame Head Detail	Frame Jamb Detail	Frame Finish	Rating (minutes)	Hardware Set	Remarks
101	4'-0"	7'-0"		5	ALUM.		-	ALUM.			FACTORY		6	AUTO. ENTRANCE SLIDERS
102	4'-0"	7'-0"		5	ALUM.		-	ALUM.			FACTORY		6	AUTO. ENTRANCE SLIDERS
103	3'-0"	7'-0"	1 3/4"	3	HM	PAINT	B	HM	3	2	PAINT		16	PROVIDE EXIT DEVICE
104	3'-0"	7'-0"	1 3/4"	4	ALUM.		-	ALUM.			FACTORY		8	PROVIDE EXIT DEVICE
105	3'-0"	7'-0"	1 3/4"	4	ALUM.		-	ALUM.			FACTORY		8	
106	3'-0"	7'-0"	1 3/4"	8	HM	PAINT	A	HM	13	12	PAINT		21	
107	PAIR 3'-0"	7'-0"	1 3/4"	7	HM	PAINT	A	HM	13	12	PAINT		13	VERIFY SIZE OF LOUVER W/MECH. CONTR.
108	3'-0"	7'-0"	1 3/4"	3A	HM	PAINT	B	HM	3	2	PAINT		16	PROVIDE EXIT DEVICE
109	3'-0"	7'-0"		4	ALUM.		-	ALUM.			FACTORY		8	PROVIDE EXIT DEVICE
110	3'-0"	6'-8"	1 3/4"	3	WD SC	STAIN	B	HM	7	6	PAINT	90 MIN.	15	
111	3'-6"	6'-8"	1 3/4"	3	WD SC	STAIN	A	HM	4	4	PAINT	45 min.	11	
112	3'-0"	6'-8"	1 3/4"	3	WD SC	STAIN	A	HM	4	4	PAINT	45 min.	17	
113	3'-0"	6'-8"	1 3/4"	3	WD SC	STAIN	A	HM	4	4	PAINT	20 MIN.	14	
114	3'-0"	6'-8"	1 3/4"	3A	WD SC	STAIN	A	HM	4	4	PAINT	20 MIN.	7	
115	3'-0"	6'-8"	1 3/4"	3	WD SC	STAIN	A	HM	11	10	PAINT		14	
116	4'-0"	6'-8"	1 3/4"	3	WD SC	STAIN	A	HM	11	10	PAINT	45 min.	19	
117	PAIR 3'-0"	7'-0"	1 3/4"	7	HM	PAINT	A	HM	13	12	PAINT		14	
118	3'-0"	6'-8"	1 3/4"	3	WD SC	STAIN	A	HM	4	4	PAINT	45 min.	20	
119	2'-6"	6'-8"	1 3/4"	3	WD SC	STAIN	A	HM	11	10	PAINT		26	
120	3'-0"	6'-8"	1 3/4"	3	WD SC	STAIN	A	HM	11	10	PAINT		18	
121	3'-0"	6'-8"	1 3/4"	3	WD SC	STAIN	A	HM	11	10	PAINT		26	
121A	3'-0"	6'-8"	1 3/4"	3	WD SC	STAIN	A	HM	11	10	PAINT		26	
122	PAIR 3'-0"	6'-8"	1 3/4"	3	WD SC	STAIN	A	HM	11	10	PAINT		13	
123	3'-0"	6'-8"	1 3/4"	3	WD SC	STAIN	A	HM	11	10	PAINT			
124	3'-0"	6'-8"	1 3/4"	3	WD SC	STAIN	A	HM	11	10	PAINT	20 MIN.	18	
125	3'-6"	6'-8"	1 3/4"	3	WD SC	STAIN	A	HM	11	10	PAINT		26	
125A														
126	3'-0"	6'-8"	1 3/4"	3	WD SC	STAIN	A	HM	4	4	PAINT		17	
127	3'-0"	6'-8"	1 3/4"	3	HM	STAIN	A	HM	4	4	PAINT	20 MIN.	17	
128	3'-0"	6'-8"	1 3/4"	3	WD SC	STAIN	A	HM	4	4	PAINT		14	
129	3'-0"	6'-8"	1 3/4"	3	WD SC	STAIN	A	HM	4	4	PAINT	45 min.	14	
130	3'-0"	6'-8"	1 3/4"	3	WD SC	STAIN	A	HM	11	10	PAINT		14	
131	3'-0"	6'-8"	1 3/4"	3	WD SC	STAIN	A	HM	11	10	PAINT		21	
132	3'-0"	6'-8"	1 3/4"	3	WD SC	STAIN	A	HM	11	10	PAINT		21	
133	3'-0"	6'-8"	1 3/4"	5	WD SC	STAIN	A	HM	7	6	PAINT	90 MIN.	15	
134	3'-0"	6'-8"	1 3/4"		WD SC	STAIN	A	HM			PAINT	20 MIN.	18	
135	3'-0"	6'-8"	1 3/4"		WD SC	STAIN	A	HM			PAINT	20 MIN.	18	
136	3'-0"	6'-8"	1 3/4"	6	HM	PAINT	A	HM	13	12	PAINT		14	
137	2'-6"	6'-8"	1 3/4"	6	HM	PAINT	A	HM	13	12	PAINT		14	
138	2'-6"	6'-8"	1 3/4"	6	HM	PAINT	A	HM	13	12	PAINT		14	
139	PAIR 2'-8"	6'-8"	1 3/4"	7	HM	PAINT	A	HM	13	12	PAINT		13	
139A	PAIR 2'-8"	6'-8"	1 3/4"	7	HM	PAINT	A	HM	13	12	PAINT		13	
140	3'-0"	6'-8"	1 3/4"		WD SC	STAIN	A	HM	11	10	PAINT		14	
201	3'-0"	6'-8"	1 3/4"	5	WD SC	STAIN	C	HM	7	6	PAINT	90 MIN.	15	
202	3'-0"	6'-8"	1 3/4"	5	WD SC	STAIN	C	HM	5	4	PAINT	45 min.	24	
203	3'-0"	6'-8"	1 3/4"	5	WD SC	STAIN	C	HM	7	6	PAINT	90 MIN.	15	
301	3'-0"	6'-8"	1 3/4"	5	WD SC	STAIN	C	HM	7	6	PAINT	90 MIN.	15	
302	3'-0"	6'-8"	1 3/4"	5	WD SC	STAIN	C	HM	5	4	PAINT	45 min.	24	
303	3'-0"	6'-8"	1 3/4"	5	WD SC	STAIN	C	HM	7	6	PAINT	90 MIN.	15	
401	3'-0"	6'-8"	1 3/4"	5	WD SC	STAIN	C	HM	7	6	PAINT	90 MIN.	15	
402	3'-0"	6'-8"	1 3/4"	5	WD SC	STAIN	C	HM	5	4	PAINT	45 min.	24	
403	3'-0"	6'-8"	1 3/4"	5	WD SC	STAIN	C	HM	7	6	PAINT	90 MIN.	15	
RI	3'-0"	6'-8"	1 3/4"	3	HM	PAINT	A	HM	7	6	PAINT		10	
A	3'-0"	6'-8"	1 3/4"	5	WD SC	PRE-FIN	C	HM	5	4	PAINT	20 MIN.	1	ILCO ELECTRONIC LOCKSET
B	3'-0"	6'-8"	1 3/4"	5	WD SC	PRE-FIN	C	HM	11	10	PAINT		5	
C	3'-0"	6'-8"	1 3/4"	10	WD SC	PRE-FIN	C	HM	11	10	PAINT		2	POCKET SLIDER
D	3'-0"	6'-8"	1¾"	5	WD SC	PRE-FIN	C	HM	9	8	PAINT	20 MIN.	3	
E	3'-0"	6'-8"	1¾"	5	WD SC	PRE-FIN	C	HM	15	14	PAINT		4	

NOTE: DOORS WITH RATING TO HAVE CLOSERS, EXCEPT DOOR "D"

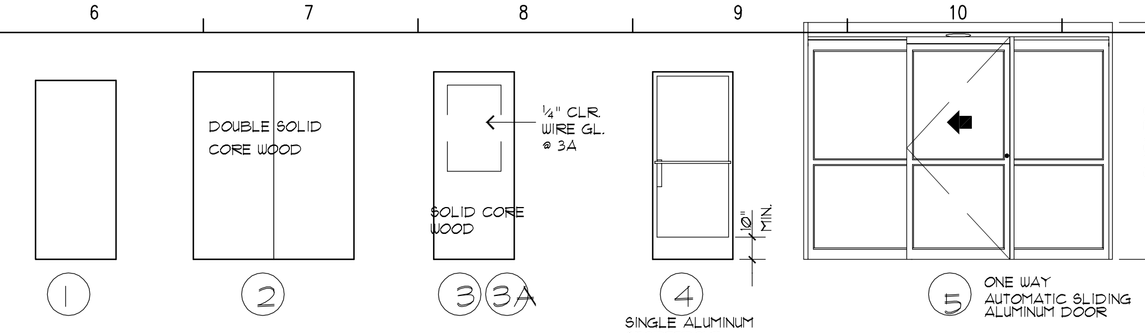

1 DOOR TYPES ELEVATION
1/4" = 1'-0"

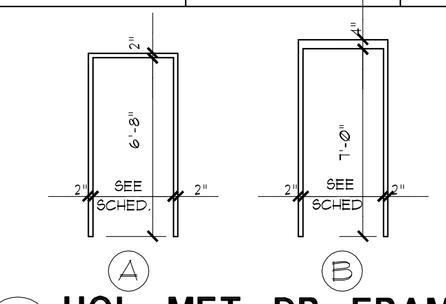

1A HOL. MET. DR. FRAME
1/4" = 1'-0"

Richard Molenaar
ARCHITECT

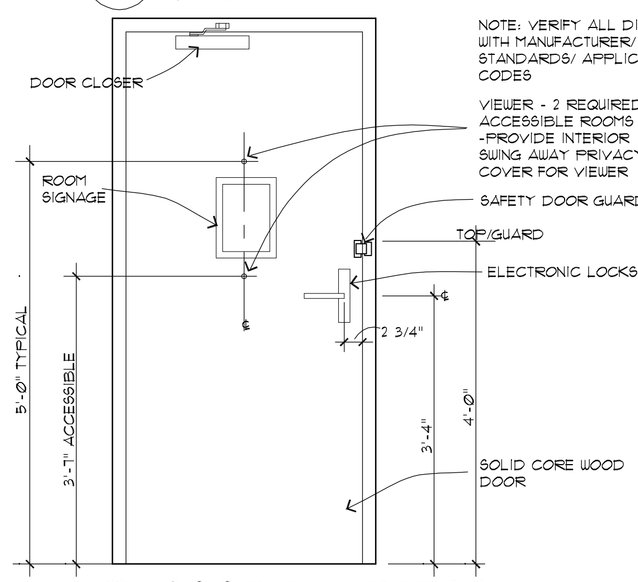

17 DOOR "A" DETAIL
3/4" = 1'-0"

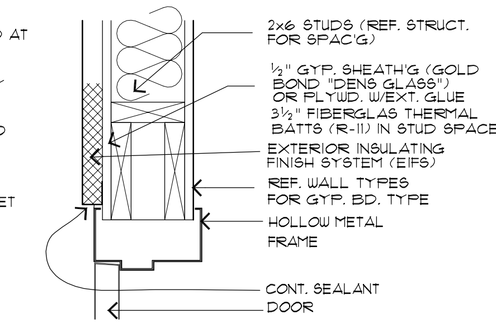

13 DOOR HEAD
1½" = 1'-0"

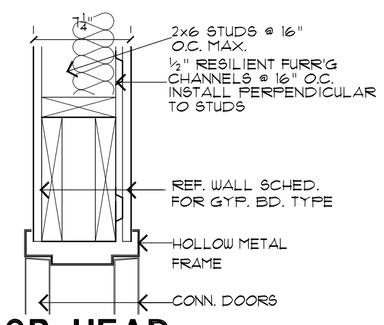

9 DOOR HEAD
1½" = 1'-0"

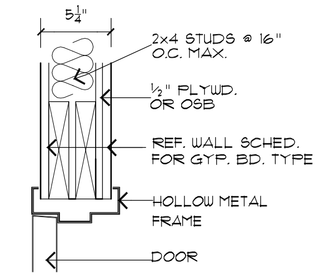

5 DOOR HEAD
1½" = 1'-0"

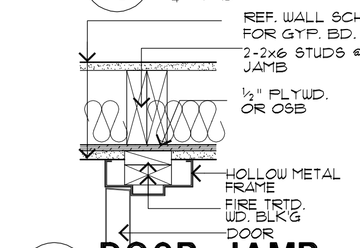

16 DOOR JAMB
1½" = 1'-0"

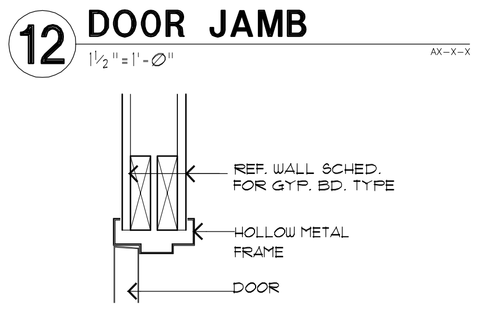

12 DOOR JAMB
1½" = 1'-0"

11 DOOR HEAD
1½" = 1'-0"

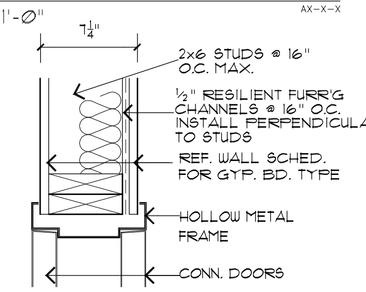

8 DOOR JAMB
1½" = 1'-0"

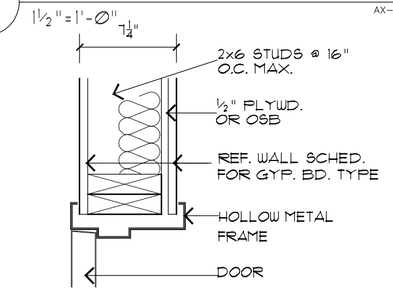

4 DOOR JAMB
1½" = 1'-0"

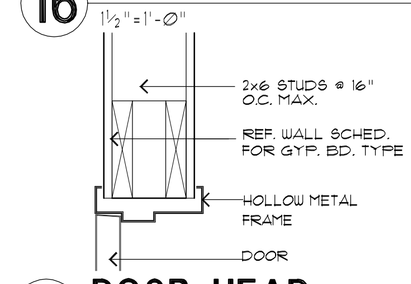

15 DOOR HEAD
1½" = 1'-0"

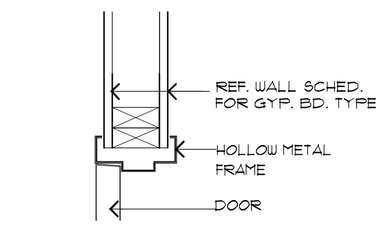

10 DOOR JAMB
1½" = 1'-0"

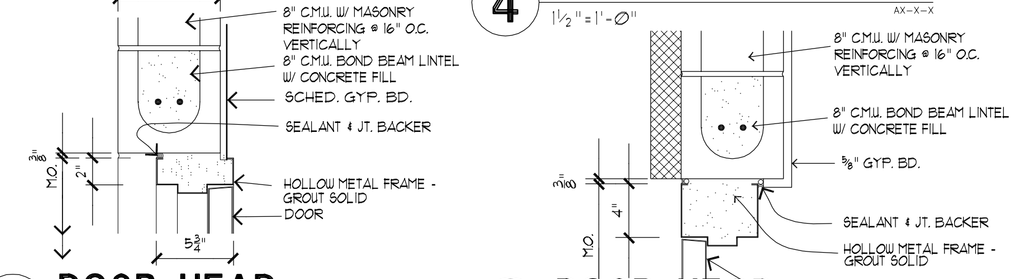

7 DOOR HEAD
1½" = 1'-0"

3 DOOR HEAD
1½" = 1'-0"

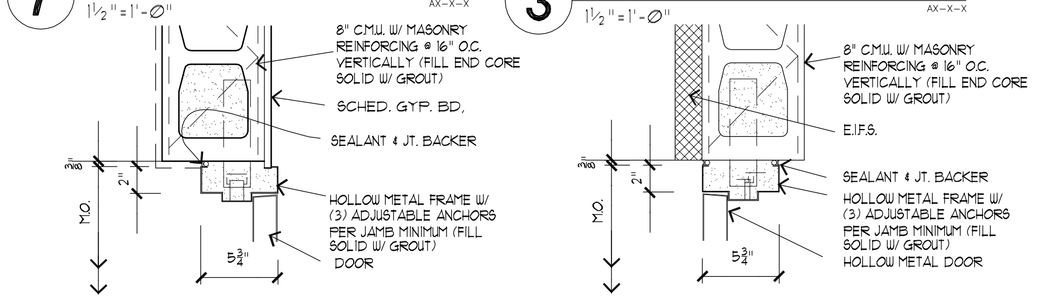

6 DOOR JAMB
1½" = 1'-0"

2 DOOR JAMB
1½" = 1'-0"

DOOR NOTES:

1. PROVIDE COMPLETE ELECTRONIC CARD CARD OPERATED LOCKSET SYSTEM AS MARKED. SYSTEM TO INCLUDE FRONT DESK UNIT, 1,000 EA. CARD KEYS, BACK UP CARD KEY KIT AND TWO (2) SPARE CARD LOCKS.
2. EXTERIOR HOLLOW METAL DOORS TO OR FROM CONDITIONED SPACES TO BE INSULATED.
3. DOOR HARDWARE SHALL CONFORM TO ADA & GOVERNING HANDICAP CODE. ALL HOL. METAL & WOOD DOORS TO HAVE LEVER SETS.
4. COORDINATE WITH MECHANICAL DRAWINGS FOR DOORS REQUIRING GRILLES.
5. DOORS WITH RATING TO HAVE CLOSERS, EXCEPT DOOR "D"
6. GLAZING IN NON-RATED DOORS, STORM DOORS, WITHIN 24 INCHES OF DOORS, WITHIN 18 INCHES ABOVE FINISHED FLOOR, AND EXCEEDING 9 SQUARE FEET WITHIN 36 INCHES OF WALKING SURFACE MUST BE SAFETY GLAZED, TEMPERED, AND PASS THE TEST REQUIREMENTS OF CPSC 16-CFR, PART 1201 AND COMPLY WITH ANSI Z97.1. [(IBC 2406.1, 2, AND 2406.3, (6) & (7)]
7. FIRE-RESISTANT RATED DOORS MUST HAVE FIRE RATED FRAMES, HARDWARE, CLOSERS, AND OTHER RATED ACCESSORIES.
8. ALL HOLLOW METAL DOOR FRAMES TO BE WELDED.

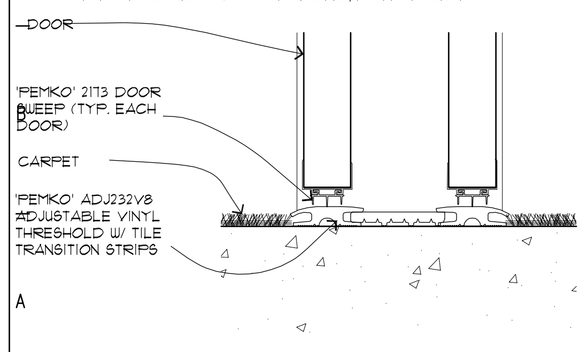

18 CONN. DOOR THRESH.
3" = 1'-0"

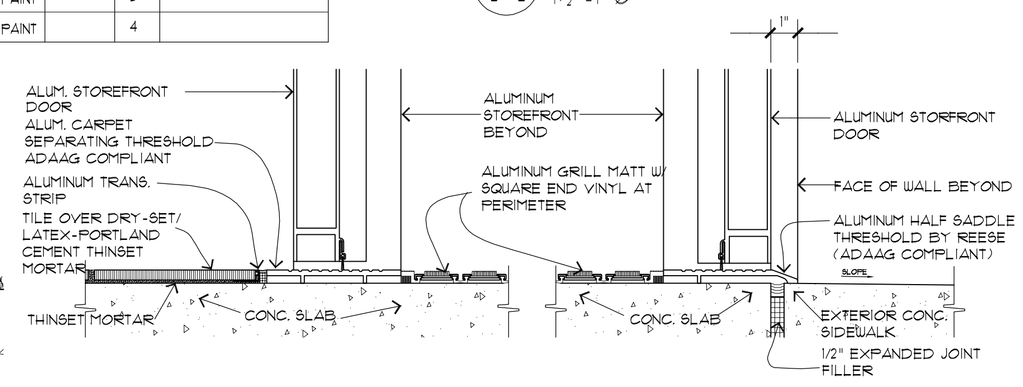

19 FLOOR TRANSITION @ ENTRY VEST.
3" = 1'-0"

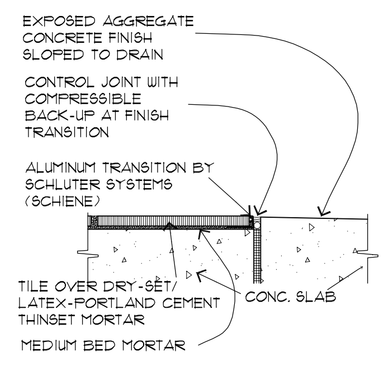

20 FLOOR TRANSITION
3" = 1'-0"

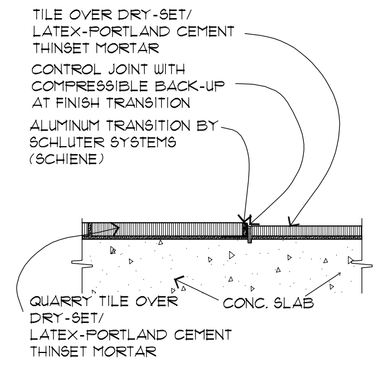

21 FLOOR TRANSITION
3" = 1'-0"

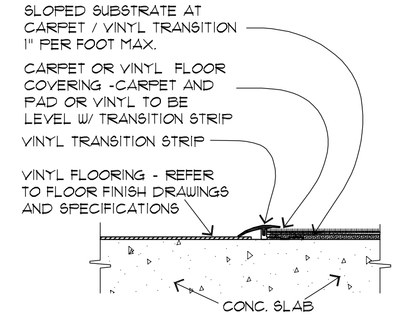

22 FLOOR TRANSITION
3" = 1'-0"

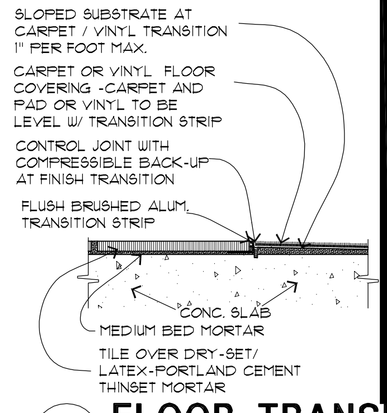

23 FLOOR TRANSITION
3" = 1'-0"

PROJECT NAME:
HOME2 SUITES BY HILTON
W Mane Street West Monroe, Lousiana

SHEET TITLE:
Door Schedule & Door Details

PROJECT NO. 13010
LATEST REVISION:
DRAWN BY: acj
CHECKED BY: rm
DATE: Sept 5, 2014
SHEET NUMBER: A610