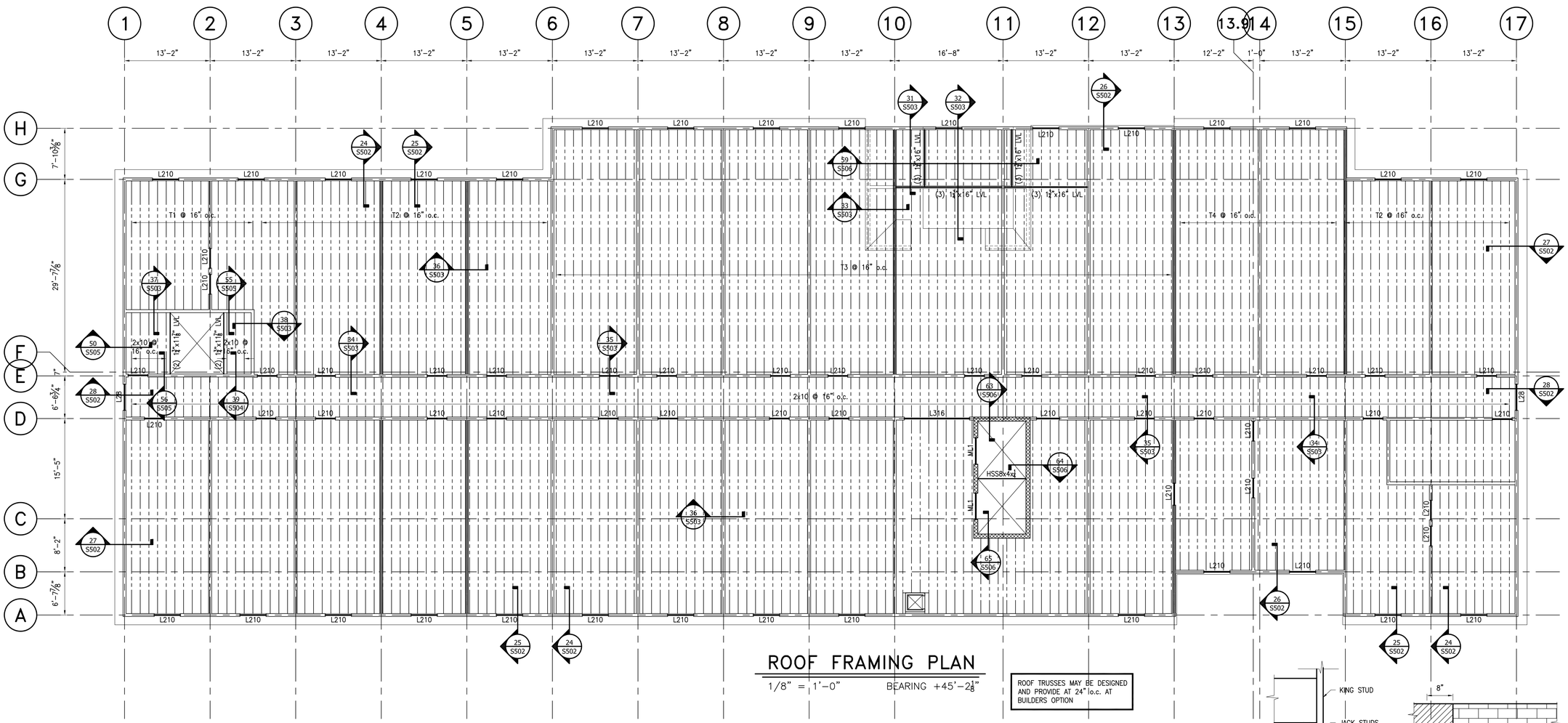

ROOF FRAMING PLAN

1/8" = 1'-0" BEARING +45'-2 1/8"

ROOF TRUSSES MAY BE DESIGNED AND PROVIDE AT 24" l.o.c. AT BUILDERS OPTION

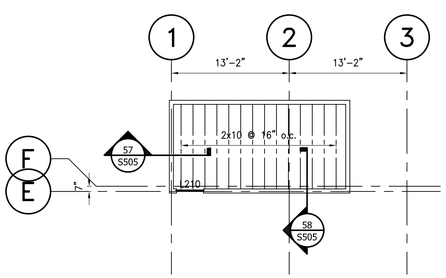

HIGH ROOF FRAMING PLAN

1/8" = 1'-0" G.C. VERIFY BEARING w/ ARCH

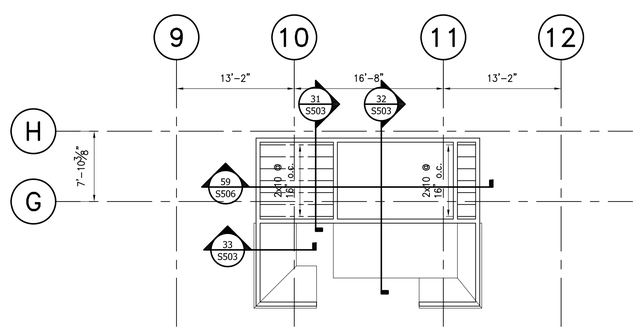

HIGH ROOF FRAMING PLAN

1/8" = 1'-0" G.C. VERIFY BEARING w/ ARCH

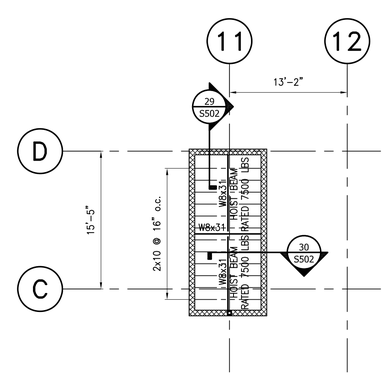

HIGH ROOF FRAMING PLAN

1/8" = 1'-0" G.C. VERIFY BEARING w/ ARCH

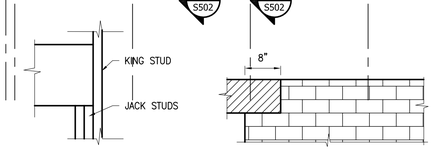

BEARING TYPE 1
ADD ONE KING POST AT FIRST FLOOR OPENINGS TO THOSE LISTED IN SCHEDULE

BEARING TYPE 2

LINTEL SCHEDULE

MARK	SIZE	DETAIL	BEARING TYPE	SUPPORT
L28	(2) 2x8		1	2 JACK STUDS 1 KING STUD
L210	(2) 2x10		1	2 JACK STUDS 1 KING STUD
L310	(3) 2x10	(2) 1/2" PLYWOOD	1	2 JACK STUDS 1 KING STUD
	NONE LOAD BEARING LINTELS	(2) 2x8	1	1 JACK STUD 1 KING STUD
L311	(3) 1 3/4"x11 7/8" LVL	1/4" LUAN	1	2 JACK STUDS 1 KING STUD
L316	(3) 1 3/4"x16" LVL	1/4" LUAN	1	4 JACK STUDS 2 KING STUDS
ML1	8F8-1B CAST CRETE		2	

WHISONANT ENGINEERING SERVICES, LLC
122 Nut Tree Court
Lexington, South Carolina 29072
(803) 957-4008
Email: bill@wesiex.com

This Drawing and The Design Shown Thereon Are The Property Of Whisonant Engineering Services, LLC. The Reproduction, Copying, Or Other Use Of Them Without Their Written Consent Is Prohibited By And Are Infringement Of Copyright Subject To Legal Action.

WILLIAM O. WHISONANT LICENSE No. 71020 07/31/18 STATE OF FLORIDA PROFESSIONAL ENGINEER

NO.	DATE	REVISION

HOME 2 SUITES
BERRYMAN ROAD
VICKSBURG, MS 39180

RELEASED FOR:
- ☐ PRELIMINARY ONLY
- ☐ BIDDING/PRICING
- ■ PERMIT
- ■ CONSTRUCTION

DATE : 07-31-18

DRAWING TITLE:
ROOF FRAMING PLAN

SCALE: AS SHOWN
PROJECT NO: 037P02
DATE: 07-31-18
DRAWN BY: HVS
CHECKED BY: WOW

SHEET NO:
S204

8/14/2018 2:20:24 PM